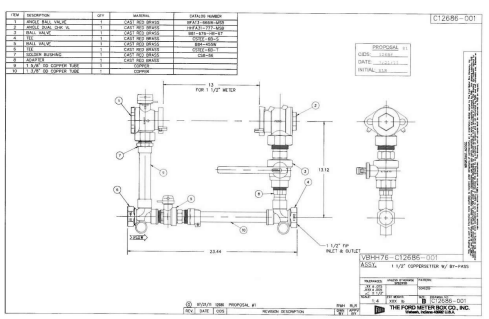

1. ALL METERS ARE TO BE PROVIDED AND INSTALLED BY PARTICIPATING UTILITY AT OWNER/DEVELOPER'S EXPENSE. METER BOX, SERVICE, AND SETTER TO BE FURNISHED AND INSTALLED BY OWNER/DEVELOPER IN ACCORDANCE WITH THE MINIMUM REQUIREMENTS SHOWN BELOW.
2. SADDLES MUST BE USED WITH ALL PLASTIC & DUCTILE IRON PIPE. SERVICE SADDLES SHALL BE USED IN ACCORDANCE WITH WATER DISTRIBUTION PIPING SPECIFICATION. SERVICE SADDLES FOR PLASTIC PIPE SHALL BE: POWERSEAL 3417, OR 241SAS; ROMAC 202S, OR 306; OR FORD METER FS202 OR FS303. FOR DUCTILE IRON PIPE USE THE ABOVE OR POWERSEAL 3413, ROMAC 202 OR FORD METER F202.
3. CORPORATION STOP SHALL BE FORD FB1000-4-G-NL, MUELLER B-25008 OR APPROVED EQUAL.
4. METER BOXES LOCATED IN AREAS SUBJECT TO VEHICULAR TRAFFIC SHALL BE CONCRETE WITH H-20 RATED TRAFFIC BEARING HATCH. ALL OTHER METER BOXES SHALL BE CARSONITE-STATES PLASTICS, INC. PLASTIC BOX, ADS CORRUGATED HDPE BOX, OR APPROVED EQUAL. MINIMUM METER BOX & LID DIAMETERS SHALL BE IN ACCORDANCE WITH: SIZING CHART BELOW.
5. SERVICE SHALL BE "K" TYPE COPPER OR P.E. 4710 , CTS O.D., MINIMUM CELL CLASS 445474E AND 445474D.
6. ~~SERVICE LINE SHALL BE PROVIDED BY OWNER.~~ SEE DETAIL ON THIS SHEET FOR COPPER METER SETTER.
7. SERVICES REQUIRING METERS LARGER THAN 2-INCH SHALL BE REVIEWED BY THE PARTICIPATING UTILITY ON A CASE BY CASE BASIS.

TRAFFIC BEARING LOCATION

TRAFFIC BEARING VAULT AND H-20 RATED HATCH SHALL BE SIZED IN ACCORDANCE WITH COMPANY REQUIREMENTS SHOWN BELOW.

NON-TRAFFIC BEARING LOCATION

SIZING CHART (1)

METER BOX SIZE (2)	DIA. (MIN.)	HEIGHT (MIN.)	COVER & LID MODEL (OR APPROVED EQUAL)
5/8"	18"	1'9"	CARSONITE FRAME & NICOR DOMESTIC COVER & LID WITH KENNELID RECORD
3/4", 1"	24"	20"	FORD VB-24-12B
1(2"-2"	30"	20"	FORD VB-30-12B
			NICOR/CARSONITE

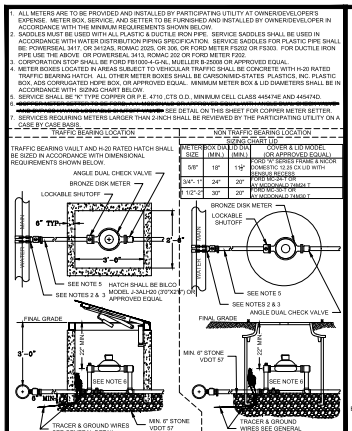

WESTERN VIRGINIA REGIONAL - CONSTRUCTION DETAIL

COMMERCIAL WATER SERVICE METER SIZES 5/8" – 2" — W-5 — 02/11/17

1. MATERIALS AND FABRICATION IN ACCORDANCE WITH ASTM C478-09.
2. WHEN USED AS SAMPLING MANHOLE FLOW SHALL PASS STRAIGHT THROUGH, i.e., 180°
3. STEPS SHALL BE VERTICALLY ALIGNED. FIRST STEP SHALL BE WITHIN 12" OF COVER, BOTTOM STEP SHALL BE WITHIN 24" OF BOTTOM OF MANHOLE.
4. FRAME AND COVER SHALL BE PROPERLY ALIGNED WITH THE 2 FOOT OPENING OF THE MANHOLE STRUCTURE AND BOLTED IN PLACE.
5. FLAT TOP MANHOLES MAY ONLY BE SUBSTITUTED WITH THE PERMISSION OF THE PARTICIPATING UTILITY.
6. FLEXIBLE JOINT MANHOLE CONNECTION SHALL BE AS MANUFACTURED BY PRES-SEAL GASKET CORPORATION OR EQUAL.
7. GROUT ANNULAR SPACE BETWEEN PIPE AND PRECAST MANHOLE ON INSIDE OF MANHOLE.
8. WHEN REPLACING AN EXISTING MANHOLE OR INSTALLING A NEW PRECAST MANHOLE ON AN EXISTING SEWER, A MINIMUM OF SIX FEET (6') OF EXISTING PIPE SHALL BE REMOVED AND REPLACED WITH NEW MATERIAL ON INLET AND OUTLET OF MANHOLE.
9. MANHOLES WHERE THE INVERT IS LOWER THAN THE NORMAL GROUNDWATER ELEVATION (i.E., ALONG CREEKS, RIVERS, LOW LYING AREAS, ETC.) SHALL HAVE A FULL EXTERIOR COATING AND JOINT WRAP APPLIED IN ADDITION TO JOINT SEALANT. SEE NOTES 10 & 11.
10. IF REQUIRED EXTERIOR VERTICAL WALL SURFACES SHALL BE FACTORY COATED IN ACCORDANCE WITH THE MANUFACTURERS RECOMMENDATION. COATING SHALL BE HIGH BUILD COAL TAR EPOXY MEETING ASTM D1227. COATING SHALL BE APPLIED IN TWO COATS TO A MINIMUM TOTAL THICKNESS OF 16 MILS.
11. IF REQUIRED ALL MANHOLES SHALL UTILIZE AN EXTERNAL FRAME AND JOINT SEAL AT ALL JOINTS AND AT THE FRAME/CHIMNEY/INTERFACE. SEAL SHALL BE MADE OF EPDM RUBBER INACCORDANCE WITH ASTM D412 OR POLYOLEFIN BACKED EXTERIOR JOINT WRAP IN ACCORDANCE WITH ASTM E-1745, C-877, AND C-990 EDM SEAL SHALL HAVE A MINIMUM THICKNESS OF 90 MILS. POLYOLEFIN BACKED EXTERIOR JOINT WRAP SHALL HAVE A BACKING BAND SUBSTANTIALLY WITH MINIMUM THICKNESS OF 4 MILS. AND BUTYL ROLLER ADHESIVE WITH MINIMUM THICKNESS OF 60 MILS. SEAL SHALL AGGRESSIVELY BOND TO CONCRETE AND METAL STRUCTURES.
12. FOR PIPE LARGER THAN 15 INCHES IN DIAMETER, THE MINIMUM INSIDE DIAMETER OF THE MANHOLE SHALL BE IN ACCORDANCE WITH MANUFACTURERS RECOMMENDATIONS BASED ON PIPE SIZE AND ANGLE BETWEEN INLET AND OUTLET PIPING.
13. 6" MINIMUM DIAMETER MANHOLE SHALL BE REQUIRED WHEN DEPTHS EXCEED 15' UNLESS OTHERWISE APPROVED BY PARTICIPATING UTILITY.

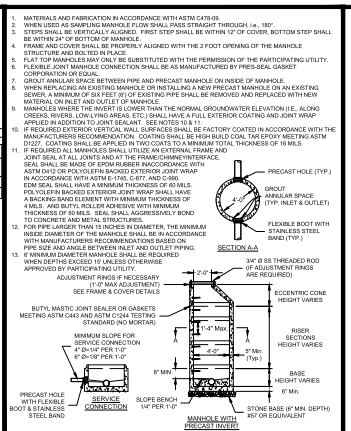

WESTERN VIRGINIA REGIONAL - CONSTRUCTION DETAIL

4' STANDARD MANHOLE FOR PIPE 15" OR SMALLER (FOR DEPTHS UP TO 15 FEET) — S-1 — 08/01/15

1. WATERTIGHT MANHOLE FRAME MODEL #10462 BY EAST JORDAN IRON WORKS, INC. OR EQUIVALENT.
2. HDPE ADJUSTMENT RINGS SHALL MEET H-20 LOAD RATING, AND SHALL BE INTERLOCKING OR UTILIZE BUTYL MASTIC JOINT SEALANT BETWEEN EACH RING TO FORM A WATERTIGHT JOINT.
3. CONCRETE ADJUSTMENT RINGS SHALL MEET H-20 LOAD RATING AND UTILIZE BUTYL MASTIC JOINT SEALANT BETWEEN EACH RING AND FRAME AN COVER TO FORM A WATERTIGHT JOINT.
4. FRAME HEIGHT SHALL BE 7" FOR BURIED LOCATIONS AND 4" FOR EXPOSED LOCATIONS.

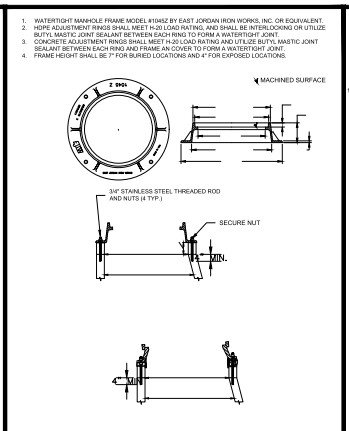

WESTERN VIRGINIA REGIONAL - CONSTRUCTION DETAIL

WATERTIGHT MANHOLE FRAME — S-4 — 01/01/14

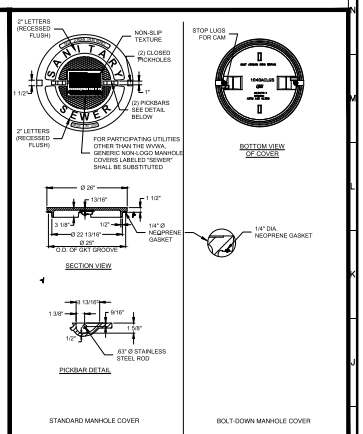

WESTERN VIRGINIA REGIONAL - CONSTRUCTION DETAIL

WATERTIGHT MANHOLE COVER — S-5 — 01/01/14

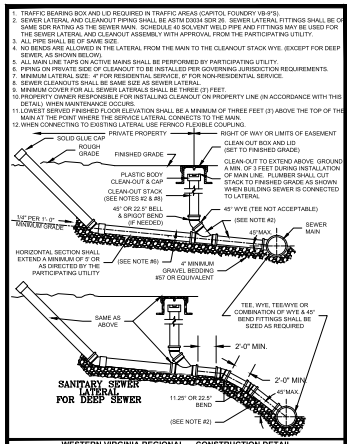

WESTERN VIRGINIA REGIONAL - CONSTRUCTION DETAIL

SANITARY SEWER LATERAL — S-6 — 01/01/14

1. TRACER WIRES SHALL BE INSTALLED USING MANHOLES, TRACER WIRE ACCESS BOXES, VALVE BOXES OR VAULTS, WATER METERS AND FIRE HYDRANTS AS ACCESS POINTS.
2. FOR WATER AND SEWER INSTALLED BY OPEN TRENCHING, HORIZONTAL DIRECTIONAL DRILLING, OR PIPE BURSTING, TRACER WIRE SHALL BE NEPTCO TRACE-SAFE WATER BLOCKING TRACER WIRE OR APPROVED EQUAL. TRACER WIRE SHALL BE A 10 AWG SOLID COPPER CONDUCTOR WITH POLYETHYLENE INSULATION SURROUNDED BY A CORE MATERIAL COMPRISED OF HIGH-TENACITY WOVEN POLYESTER WITH WATER BLOCKING YARNS ENCAPSULATED IN AN ABRASION RESISTANT (GREEN OR BLUE) 30 MIL HDPE JACKET. TRACER WIRE SHALL HAVE A MINIMUM TENSILE STRENGTH OF 1,900 LBS AND SHALL NOT CONDUCT ELVECTRICAL CURRENT WHEN ENERGIZED BY A TRACER. TRACER WIRE SHALL BE SPLICED USING SCOTCHLOK 3576 SPLICE CONNECTORS WITH A WOVEN POLYESTER FIBER CORE SUCH AS NEPTCO TRACE-SAFE WATER BLOCKING CONNECTORS OR APPROVED EQUAL. SPLICES SHALL BE MADE IN ACCORDANCE WITH THE MANUFACTURER'S INSTALLATION INSTRUCTIONS
3. SPLICES AT THE ENDS OF TRACER WIRE, INTERMITTENT OF ACCESS POINTS, SHALL BE MADE USING NEPTCO TS-19-KL WATER BLOCKING BUTT SPLICE CONNECTORS OR APPROVED EQUAL.
4. TRACER WIRE CONNECTIONS TO HYDRANTS SHALL BE MADE USING NEPTCO TS-12-10-KL WATER BLOCKING BUTT SPLICE CONNECTORS OR APPROVED EQUAL. TRACER WIRE SHALL BE CONNECTED TO THE 12 AWG OPENING OF THE BUTT SPLICE CONNECTOR, EXTENDED UP INTO THE ACCESS POINT STRUCTURE, AND ATTACHED TO THE GROUND BAR PER NOTE #10 OR LID TERMINALS PER NOTE #11. AT ALL ACCESS POINTS, EACH DIRECTION OF PIPE SHALL HAVE AN INDEPENDENT TRACER WIRE FEED EXTENDED TO GROUND BAR OR LID TERMINALS TO ALLOW FOR DIRECTIONALLY INDUCING CURRENT DURING LOCATING. THE 12 AWG COPPER TRACER WIRE SHALL BE OF ADEQUATE LENGTH TO EXTEND FIVE (5) FEET ABOVE THE TOP OF STRUCTURE.
5. WHEN DUCTILE IRON PIPE IS INSTALLED WITHOUT STEEL CASING PIPE, SUCH AS A DIRECTIONALLY DRILLED CROSSINGS, AND CONNECTED TO DUCTILE IRON PIPE ON EACH END, TRACER WIRE SHALL BE INSTALLED ALONG FULL LENGTH OF HDPE PIPE WITH AN ACCESS POINT INSTALLED AT EACH HDPE/DUCTILE IRON TRANSITION. TRACER WIRE SHALL BE CONNECTED TO THE ACCESS POINT IN ACCORDANCE WITH THIS DETAIL.
6. AS-BUILTS SHALL SHOW TRACER WIRE(S) LOCATION AND ACCESS POINT(S).
7. THE TRACER WIRE SHALL BE PLACED ALONG THE LOWER QUADRANT OF THE PIPE. THE WIRE SHALL NOT TOUCH THE PIPE, BUT SHALL BE A MAXIMUM OF 6" FROM THE PIPE. NON-METALLIC SPACERS MAY BE USED TO MAINTAIN A SET DISTANCE FROM THE UTILITY.
8. WHERE LINES ARE LESS OR GREATER THAN SIX (6) FEET IN DEPTH, WIRE SHALL BE BROUGHT TO THE SURFACE EVERY FIVE-HUNDRED (500) FEET AND PLACED IN A WATER METER BOX OR A DRAINAGE & WATER SOLUTIONS, INC. (OR APPROVED EQUAL) ALL CAST IRON TRACER WIRE ACCESS BOX.
9. THE TRACER WILL BE TESTED BY THE PARTICIPATING UTILITY AS PART OF THE PROJECT'S FINAL ACCEPTANCE.
10. THE GROUND WIRE SHALL BE #6 AWG COPPER WIRE AND SHALL BE OF ADEQUATE LENGTH TO EXTEND A MINIMUM OF (5) FIVE FEET BEYOND THE TOP OF THE STRUCTURE. THE END OF THE GROUND WIRED SHALL CONNECT TO THE GROUND BAR OR LID TERMINAL. GROUND WIRE SHALL BE CONTINUOUS.
11. A GROUND ROD SHALL BE INSTALLED AT EACH LOCATION WHERE GROUND WIRE SURFACES AND CONNECTS TO GROUND BAR OR LID TERMINAL. GROUND ROD SHALL BE COPPER COATED WITH A MINIMUM DIAMETER OF 5/8" AND SHALL BE BURIED A MINIMUM OF FOUR (4) FEET INTO THE GROUND.
12. THE GROUND BAR SHALL BE STAINLESS STEEL AND SHALL BE ATTACHED USING SS# X 1#" SS HEX TAPCON. THE FOLLOWING SHALL BE INSTALLED IN (4) FOUR CENTER HOLES: 10-32SS NUTS, #10 SS WASHERS AND 10-32 X #SS PHILLIPS. THE FOURTH HOLE SHALL HAVE A BUENCY KAGU MECHANICAL TERMINAL LUG FOR THE #6 AWG GROUND WIRE. THE ASSEMBLY CAN BE ACQUIRED AT: FERGUSON WATERWORKS SUPPLY, INC. 540-353-9083) - CLAMP RFC-11. THE ENDS OF THE TRACER WIRES SHALL BE PLACED IN THE GROUND ROD BY EXOTHERMIC WELD.
13. IF USING TRACER WIRE ACCESS BOX AS ACCESS POINT, GROUND BAR WILL NOT BE REQUIRED. THE REMOVABLE LID ON THE ACCESS BOX SHALL CONTAIN TWO SCREW TERMINALS. THE 12 AWG COPPER TRACER WIRE SHALL BE BROUGHT UP IN ACCESS BOX AND CONNECTED TO ONE OF THE SCREW TERMINALS. IF MORE THAN ONE TRACER WIRE IS NECESSARY TO ACCOUNT FOR TOTAL NUMBER OF PIPE DIRECTIONS AT ACCESS BOX, MULTIPLE TRACER WIRES SHALL BE CONNECTED TO THAT SAME SCREW TERMINAL. THE #6 AWG COPPER GROUND WIRE SHALL BE CONNECTED FROM THE GROUND ROD TO THE REMAINING SCREW TERMINAL WITH ONE END OF THE GROUND WIRE SHALL BE CONNECTED TO THE GROUND ROD. THE GROUND WIRE SHALL BE COPPER WIRE AND GROUND WIRE SHALL BOTH BE OF ADEQUATE LENGTH TO EXTEND FIVE (5) FEET ABOVE THE TOP OF ACCESS BOX.
14. TWO WRAPS OF TRACER WIRE SHALL BE WRAPPED SNUGGLY AROUND BASE OF HYDRANT. WIRE SHALL NOT BE LEFT IN A WAY THAT WOULD INTERFERE WITH MOWING AROUND HYDRANT.

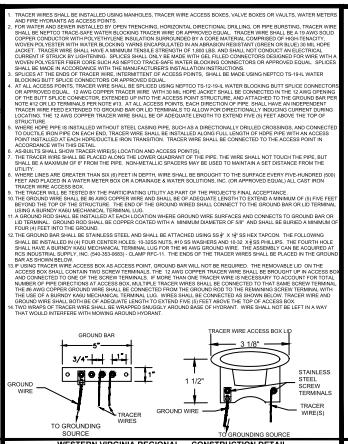

WESTERN VIRGINIA REGIONAL - CONSTRUCTION DETAIL

TRACER WIRE FOR NON-METALLIC PRESSURE PIPE — G-4 — 01/01/14

1. BEDDING, HAUNCHING AND INITIAL BACKFILL CONSTRUCTION SHALL BE IN ACCORDANCE WITH THIS DETAIL AND MANUFACTURER'S RECOMMENDATION.
2. ALL PVC PIPE SHALL BE BEDDED IN COMPACTED VDOT #57 OR #58 STONE, OR CRUSHER RUN.
3. IN AREAS SUBJECTED TO VEHICULAR TRAFFIC, BEDDING STONE AND FILL SHALL BE PLACED IN 6" LIFTS FROM BOTTOM OF TRENCH TO 1' ABOVE THE PIPE AND THE REMAINING SHALL BE PLACED IN 10" LIFTS AND SHALL BE COMPACTED TO AT LEAST 90% OF MAXIMUM DENSITY AS DETERMINED BY ASTM D 698.
4. BEDDING REQUIREMENTS FOR DUCTILE IRON WATER LINE ARE DEPENDENT ON MANUFACTURER'S BEDDING CRITERIA.
5. ALL EXCAVATIONS SHALL COMPLY WITH OSHA TECHNICAL MANUAL, CHAPTER 2, TITLED "EXCAVATIONS: HAZARD RECOGNITION IN TRENCHING AND SHORING".
6. THE TRACER WIRE SHALL BE PLACED ALONG THE LOWER QUADRANT OF THE PIPE. THE WIRE SHALL NOT TOUCH THE PIPE, BUT SHALL BE A MAXIMUM OF 6" FROM THE PIPE. NON-METALLIC SPACERS MAY BE USED TO MAINTAIN A SET DISTANCE FROM THE UTILITY.

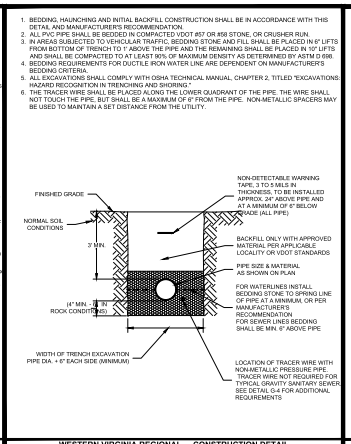

WESTERN VIRGINIA REGIONAL - CONSTRUCTION DETAIL

BEDDING AND BACKFILL OUTSIDE OF PAVED AREAS — G-11 — 01/01/14

1. BEDDING, HAUNCHING AND INITIAL BACKFILL CONSTRUCTION SHALL BE IN ACCORDANCE WITH THIS DETAIL AND MANUFACTURERS RECOMMENDATION.
2. ALL PVC PIPE SHALL BE BEDDED IN COMPACTED VDOT #57 OR #58 STONE.
3. IN VDOT ROW, THE CONTRACTOR SHALL REPLACE THE PAVEMENT AS REQUIRED AND SPECIFIED BY VDOT. IN ROANOKE CITY, CONTRACTOR SHALL REPLACE PAVEMENT AS REQUIRED BY CITY OF ROANOKE RIGHT OF WAY EXCAVATION AND RESTORATION STANDARDS, LATEST EDITION.
4. ALL CONSTRUCTION WITHIN THE PUBLIC RIGHT-OF-WAY SHALL BE AS SPECIFIED BY VDOT OR APPLICABLE LOCALITY.
5. PRIOR TO CONSTRUCTION, CONTRACTOR IS RESPONSIBLE FOR SECURING ALL REQUIRED PERMITS FROM VDOT AND/OR APPLICABLE LOCALITY.
6. IN AREAS SUBJECTED TO VEHICULAR TRAFFIC, BEDDING STONE AND FILL SHALL BE PLACED IN 6" LIFTS AND SHALL BE COMPACTED TO AT LEAST 95% OF MAXIMUM DENSITY AS DETERMINED BY ASTM D 698.
7. ALL SEWER LINE PIPE SHALL BE BEDDED IN COMPACTED GRANULAR MATERIAL. BEDDING REQUIREMENTS FOR DUCTILE SEWER LINE ARE DEPENDENT ON MANUFACTURER'S BEDDING CRITERIA.
8. BENCH CUT ON EACH SIDE OF PAVEMENT SHALL BE IN ACCORDANCE WITH VDOT OR APPLICABLE LOCALITY'S SPECIFICATIONS
9. ALL EXCAVATIONS SHALL COMPLY WITH OSHA TECHNICAL MANUAL, CHAPTER 2, TITLED "EXCAVATIONS: HAZARD RECOGNITION IN TRENCHING AND SHORING".
10. THE TRACER WIRE SHALL BE PLACED ALONG THE LOWER QUADRANT OF THE PIPE. THE WIRE SHALL NOT TOUCH THE PIPE, BUT SHALL BE A MAXIMUM OF 6" FROM THE PIPE. NON-METALLIC SPACERS MAY BE USED TO MAINTAIN A SET DISTANCE FROM THE UTILITY.

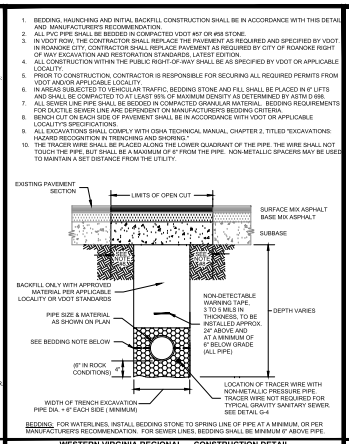

BEDDING: FOR WATERLINES, INSTALL BEDDING STONE TO SPRING LINE OF PIPE AT A MINIMUM, OR PER MANUFACTURER'S RECOMMENDATION. FOR SEWER LINES, BEDDING SHALL BE MINIMUM 6" ABOVE PIPE.

WESTERN VIRGINIA REGIONAL - CONSTRUCTION DETAIL

BEDDING AND BACKFILL UNDER PAVEMENT AND IN RIGHT-OF-WAY — G-12 — 01/01/14

NOTES:
1. MINIMUM RETENTION TIME SHOULD BE 30 MINUTES AT PEAK FLOW.
2. GREASE INTERCEPTOR SHOULD BE DESIGNED TO WITHSTAND TRAFFIC LOADS IF APPLICABLE.
3. FRAMES AND COVERS SHALL BE CAST IRON & WATERTIGHT. NO PLASTIC COVERS SHALL BE ALLOWED.
4. ALL PIPE SHALL BE SCH 40 PVC.
5. A NON - MONOLITHIC UNIT SHALL HAVE THE FOLLOWING INSTALLED PER MANUFACTURER'S SPEC:
   A.) A CONSEAL CS - 102 BUTYL RUBBER SEALANT (OR EQUIVALENT) IN THE JOINT.
   B.) 24" CONSEAL CS - 212 POLYOLEFIN BACKED EXTERIOR WRAP (OR EQUIVALENT) CENTERED OVER THE EXTERIOR OF THE JOINT.
6. GREASE INTERCEPTOR SHALL BE INSPECTED AND APPROVED BY THE PARTICIPATING UTILITY PRIOR TO SITE RECEIVING WATER SERVICE CONNECTION.
6. FORTY-EIGHT (48) HOURS PRIOR TO INSTALLATION, THE CONTRACTOR SHALL COMPLETE THE FOLLOWING:
   A.) CONTACT PARTICIPATING UTILITY TO DETERMINE PROPER SUBMITTAL AND INSPECTION PROCEDURE.
   B.) FOR UNITS INSTALLED INTO THE WESTERN VIRGINIA WATER AUTHORITY'S SYSTEM:
      1.) SUBMIT SHOP DRAWINGS TO C. ALTICE, 601 S JEFFERSON ST, SUITE 300, ROANOKE, VA 24011.
      2.) CALL (540) 637-4660 TO SCHEDULE GREASE INTERCEPTOR INSPECTION. THE INSPECTION SHALL OCCUR PRIOR TO THE CONTRACTOR COVERING THE GREASE INTERCEPTOR.
7. CONCRETE SHALL BE TYPE II AND CONFORM TO ASTM C150.
8. ALL OTHER DETAILS SHALL BE IN ACCORDANCE WITH THE LATEST REVISION OF ASTM C1613.
9. ALL PIPES SHALL EXTEND 5" ABOVE WATER SURFACE.
10. IF INTERCEPTOR IS SUBJECTED TO TRAFFIC, ACCESS FOR BAFFLE TEES SHALL BE TRAFFIC RATED CAST IRON FRAME & COVER.

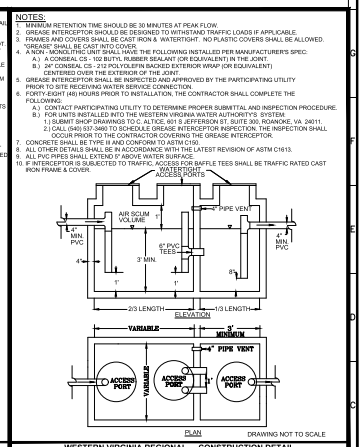

WESTERN VIRGINIA REGIONAL - CONSTRUCTION DETAIL

GREASE INTERCEPTOR — S-17 — 01/01/14

City of Roanoke
Planning, Building, & Development
COMPREHENSIVE DEVELOPMENT PLAN
APPROVED
by Ken Richardson
03/24/2020

BALZER AND ASSOCIATES, INC.
REFLECTING TOMORROW
www.balzer.cc
Roanoke
New River Valley
Richmond
Staunton
Harrisonburg
RESIDENTIAL LAND DEVELOPMENT ENGINEERING
SITE DEVELOPMENT ENGINEERING
LAND USE PLANNING & ZONING
LANDSCAPE ARCHITECTURE
LAND SURVEYING
ARCHITECTURE
STRUCTURAL ENGINEERING
TRANSPORTATION ENGINEERING
ENVIRONMENTAL & SOIL SCIENCE
WETLAND DELINEATIONS & STREAM EVALUATIONS
Balzer and Associates, Inc.
1208 Corporate Circle
Roanoke, VA 24018
540-772-9580
FAX 540-772-8050
COMMONWEALTH OF VIRGINIA
CHRISTOPHER P. BURNS
Lic. No.047338
2/18/19
PROFESSIONAL ENGINEER

STARBUCKS
3601 BLUE HILLS VILLAGE DRIVE NE
WATER & SEWER DETAILS
CITY OF ROANOKE, VIRGINIA

DRAWN BY	CPB
DESIGNED BY	CPB
CHECKED BY	BTC
DATE	12/18/18
SCALE	N.T.S.

REVISIONS:
2/18/2019

SHEET NO.
C13
JOB NO. 04170055.00