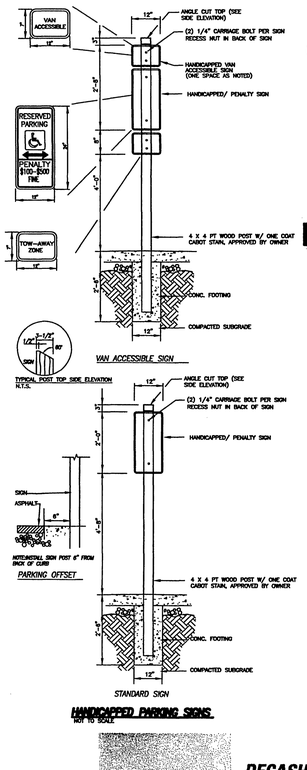

HANDICAPPED PARKING SIGNS
NOT TO SCALE

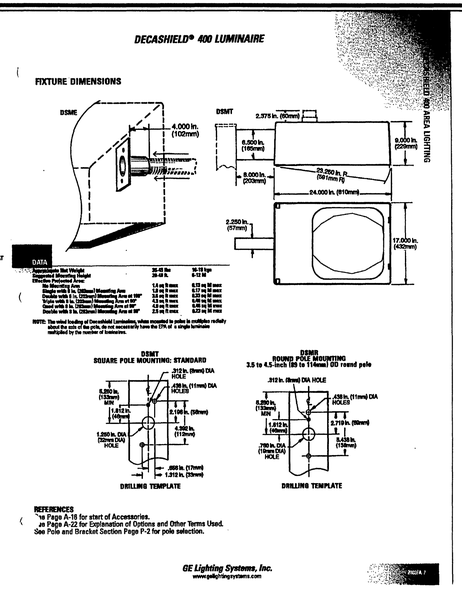

DECASHIELD® 400 LUMINAIRE

APPLICATIONS
- Walkways, driveways, tennis courts, malls, shopping centers, commercial and industrial complexes
- Residential areas and parkway lighting.

SPECIFICATION FEATURES
- UL/CSA 1598 Listed
  Suitable For Wet Locations
- Standard construction is IP54
- Heavy-duty die-cast aluminum housing and door
- Polyester powder paint finish standard in dark bronze, black, white, gray or aluminum
- No-tool access stainless steel latch design
- Heat and impact resistant tempered flat glass lens
- ALGLAS® finish on Type II, Type III and Type V reflectors, anodized finish on Forward Throw reflector
- Type II, Type III metal halide, and all Forward Throw reflectors are field rotatable
- Enclosed and gasketed optical
- Decorative Mounting Arm standard for flat or curved (for 3.5 to 4.5) OD pole (drilling templates are the same as those for the Decashield 1000 and Dimension™ luminaires)
- Mogul base socket – E39 standard
- Plug-in ignitor
- Unit shipped complete in one carton (Ballast secured to housing)
- Removable ballast tray
- Magnapack packaging available

ORDERING NUMBER LOGIC

DSMT	40	S	0	A	1	G	MC3	CG	2
PRODUCT	WATTAGE	LIGHT SOURCE	VOLTAGE	BALLAST	PE RECEPTACLE	LENS TYPE	BALLAST TYPE	COLOR	OPTIONS
XXXX DSMT = Decashield 400 Luminaire with Ballast Tray Flat Surface & Mounting Arm DSME = Decashield 400 Luminaire with 2" External Slipfitter Installed DSMS = Decashield 400 Luminaire with Ballast Tray Pole	XX 15 = 150 (55W) 17 = 175 25 = 250/MDM 40 = 400 *250/MDM connected for 120V	X S = HPS M = MH P = Pulse Start MH Standard lamp lamp not included.	X 1 = 120 2 = 208 3 = 240 4 = 277 5 = 480 D = 347 F = 120/240* V = 220 50Hz V = 240 NOTE: 120/240*/347 connected for 120V	X B = 120/208/240/277 Multivolt 1 = 120 2 = 208 3 = 240 4 = 277 5 = 480 D = 347 F = 120/240* V = 220	X See Ballast and Photometric Selection Table A = Auto-reg D = E1-Lowg G = Mog-Reg Ballast H = Mogul Extended Socket Shell K = HPS Reactor w/ Leg R1 = Hat Rotatable (Must also order "P" explained right. Shown in Cutsheet Illustration) M = Mogul P = CWI HID Extended Socket Shell	X = None 2 = PE Receptacle 4 = PE Receptacle and Shorting Cap NOTE: Receptacle connected same voltage as unit.	X G = Glass	XXX See Ballast and Photometric Selection Table MC2 – Medium Cutoff Type II MC3 – Medium Cutoff Type III FWC = FWT w/ILS FWT = Forward Throw HTV = Horizontal Type V	XX AL = Aluminum BL = Black DG = Dark Bronze (Standard) CG = Charcoal Gray WH = White NOTE: Contact factory for other colors.	XXX A = Lightning Arrester, Grounding Type C = Charcoal Filter (May not be available with FWT) F = Fusing (Not available with HID Ignitor) 120/347V) J = Line Surge Protector, Separation Type P = Provide with 6' of 14/3 cable. R = No Mounting Arm G = Non-Time Delay Automatically Switched Quartz

BALLAST AND PHOTOMETRIC SELECTION TABLE
All light sources are clear unless otherwise indicated.

Wattage	Light Source	Ballast Type/Voltage 60Hz Multivolt	120	208, 240, 277, 480	347, 120/347	220	240	50Hz MC2	MC3	FWT	HTV	FWC
								Photometric Curve Number 35-17 - - - - IES Distribution Type				
150(55V)	HPS	H,M,A	B,H,M,A	B,M,A	H	N/A	N/A	8591	8596	8604	8599	452557
250, 400	HPS	A	A, P	A, P	A, P	A,H	A	8592	7315	8605	8600	452555
175, 250	MH	A	A	A	A	A	N/A	8594	8597	8607	8602	452559
400	MH	A	A, P	A, P	A, P	A	A	8595	8598	8608	8603	452554
250	PMH	A	A	A	A(347)	N/A	N/A	8594	8597	8607	8602	452559
400	PMH	A	A	A	A(347)	N/A	N/A	8595	8598	8608	8603	452554

NOTE: N/A = Not available.

GE Lighting Systems, Inc.
www.gelightingsystems.com

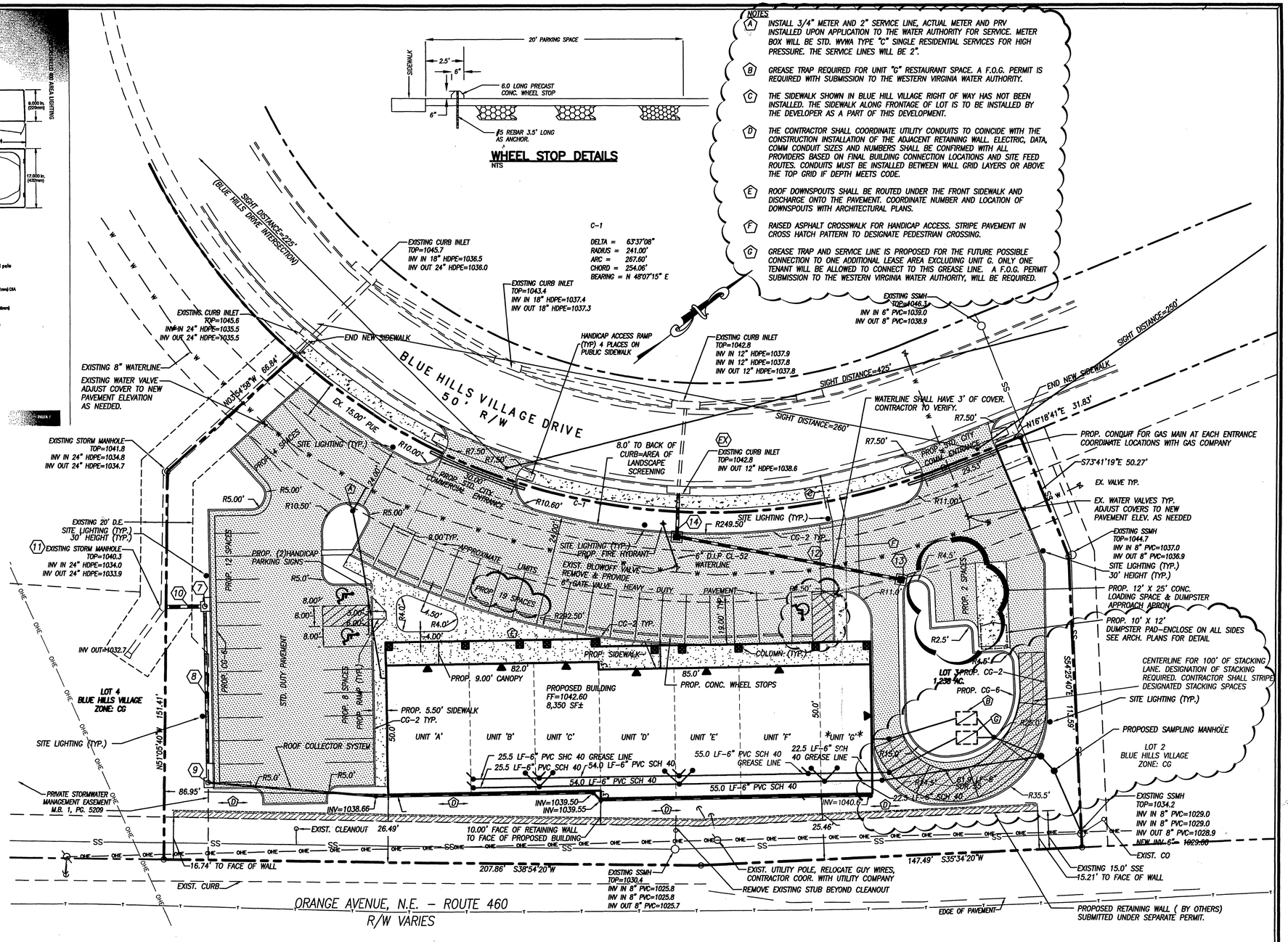

NOTES:

(A) INSTALL 3/4" METER AND 2" SERVICE LINE. ACTUAL METER AND PRV INSTALLED UPON APPLICATION TO THE WATER AUTHORITY FOR SERVICE. METER BOX WILL BE STD. WWA TYPE "C" SINGLE RESIDENTIAL SERVICES FOR HIGH PRESSURE. THE SERVICE LINES WILL BE 2".

(B) GREASE TRAP REQUIRED FOR UNIT "G" RESTAURANT SPACE. A F.O.G. PERMIT IS REQUIRED WITH SUBMISSION TO THE WESTERN VIRGINIA WATER AUTHORITY.

(C) THE SIDEWALK SHOWN IN BLUE HILL VILLAGE RIGHT OF WAY HAS NOT BEEN INSTALLED. THE SIDEWALK ALONG FRONTAGE OF LOT IS TO BE INSTALLED BY THE DEVELOPER AS A PART OF THIS DEVELOPMENT.

(D) THE CONTRACTOR SHALL COORDINATE UTILITY CONDUITS TO COINCIDE WITH THE CONSTRUCTION INSTALLATION OF THE ADJACENT RETAINING WALL. ELECTRIC, DATA, COMM CONDUIT SIZES AND NUMBERS SHALL BE CONFIRMED WITH ALL PROVIDERS BASED ON FINAL BUILDING CONNECTION LOCATIONS AND SITE FEED ROUTES. CONDUITS MUST BE INSTALLED BETWEEN WALL GRID LAYERS OR ABOVE THE TOP GRID IF DEPTH MEETS CODE.

(E) ROOF DOWNSPOUTS SHALL BE ROUTED UNDER THE FRONT SIDEWALK AND DISCHARGE ONTO THE PAVEMENT. COORDINATE NUMBER AND LOCATION OF DOWNSPOUTS WITH ARCHITECTURAL PLANS.

(F) RAISED ASPHALT CROSSWALK FOR HANDICAP ACCESS. STRIPE PAVEMENT IN CROSS HATCH PATTERN TO DESIGNATE PEDESTRIAN CROSSING.

(G) GREASE TRAP AND SERVICE LINE IS PROPOSED FOR THE FUTURE POSSIBLE CONNECTION TO ONE ADDITIONAL LEASE AREA EXCLUDING UNIT G. ONLY ONE TENANT WILL BE ALLOWED TO CONNECT TO THIS GREASE LINE. A F.O.G. PERMIT SUBMISSION TO THE WESTERN VIRGINIA WATER AUTHORITY, WILL BE REQUIRED.

NOTES:
1. INSTALLATION OF STANDARD PAVEMENT MARKINGS AND TURN ARROWS FOR THE NEWLY CONSTRUCTED RIGHT LANES ON BLUE HILLS DRIVE AND ON ORANGE AVENUE SHALL BE INSTALLED PRIOR TO THE OCCUPANCY OF LOT 3.
2. INSTALLATION OF STOP SIGNS ON BLUE HILLS VILLAGE DRIVE AT ORANGE AVENUE AND AT BLUE HILLS DRIVE SHALL BE INSTALLED PRIOR TO THE OCCUPANCY OF LOT 3.
3. NO OUTDOOR BUILDING-MOUNTED LIGHTING IS PLANNED OR IS A PART OF THIS COMPREHENSIVE DEVELOPMENT PLAN. SHOULD OUTDOOR BUILDING-MOUNTED LIGHTING BE PLANNED AT A FUTURE DATE FOR THIS PROJECT PLANS MUST BE SUBMITTED AND REVIEWED FOR COMPLIANCE WITH THE ZONING ORDINANCE.
4. CLEANOUTS FOR GREASE TRAP SHALL BE LABELLED GREASE TRAP AND CLEANOUTS FOR SANITARY SEWER SHALL BE NOTED AS SANITARY SEWER ON CLEANOUT CAP.

COMMONWEALTH OF VIRGINIA
ROBERT H. WAMPLER, JR.
Lic. No. 34713
7/16/09
PROFESSIONAL ENGINEER

* NOTE:
IN ADDITION TO RETAIL, UNIT G USE MAY ALSO BE AN EATING ESTABLISHMENT SPACE.

APPROVED
JUL 28 2009

20 0 20 40 60
Scale 1" = 20'

ENGINEERING CONCEPTS, INC.
20 S. ROANOKE ST., PO BOX 619
FINCASTLE, VIRGINIA 24090
540.473.1253 FAX: 540.473.1254

No.	Revision	By	Appd.	Date
1	ROANOKE CITY COMMENTS	JSC	RHW	7/15/09

Drawn DRB/JSC
Designed DRB/JDE
Checked JSC
Approved RHW

DEVELOPEMENT PLAN FOR LOT 3 – BLUE HILLS VILLAGE

SITE DIMENSIONAL PLAN ROANOKE, VIRGINIA

1"=20'
JUNE 24, 2009
PROJECT: 07047.01
3