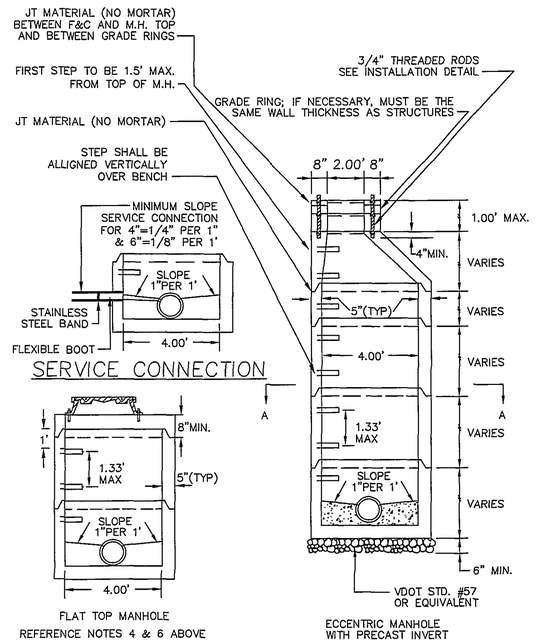

4' STANDARD MANHOLE FOR PIPE 15" OR SMALLER

NTS

NOTES:

1. ALL MANHOLE FRAMES AND COVERS SHALL BE DEWEY BROTHERS, INC. MH-RCR-3000W IN NON-PAVED AREAS, MH-RCR-3000ECW IN PAVED AREAS, MH-RCR-3000 IN AREAS NOT SUBJECT TO FLOODING OR APPROVED EQUAL.
2. THE FIRST STEP IN THE ECCENTRIC MANHOLE SHALL BE 1 FOOT FROM THE TOP OF THE CONE SECTION AND A MAXIMUM OF 4.5 INCHES WIDE FROM THE INSIDE FACE OF THE CONE SECTION.
3. THE FRAME AND COVER SHALL BE PROPERLY ALIGNED WITH THE 2 FOOT OPENING OF THE MANHOLE STRUCTURE AND BOLTED IN PLACE.
4. ALL SAMPLING MANHOLES SHALL BE CONSTRUCTED AS PER MANHOLE DETAILS. WHEN NECESSARY, THE FLAT TOP MANHOLE MAY BE SUBSTITUTED. WITH ECCENTRIC OPENING AT STEPS.
5. AN ASPHALT COATING SHALL BE REQUIRED ON THE OUTSIDE OF ALL MANHOLES.
6. THE FRAME MUST BE IN PLACE PRIOR TO VACUUM TESTING.
7. FLAT TOP SHALL BE VDOT APPROVED FOR TRAFFIC BEARING.

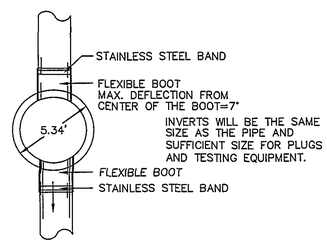

SECTION A-A

NOTE:

COMPLETE FIRE HYDRANT ASSEMBLY INCLUDES BRANCH PIPE, FITTINGS, GATE VALVE AND BOX, CONCRETE BASE, AND TRUST BLOCK.

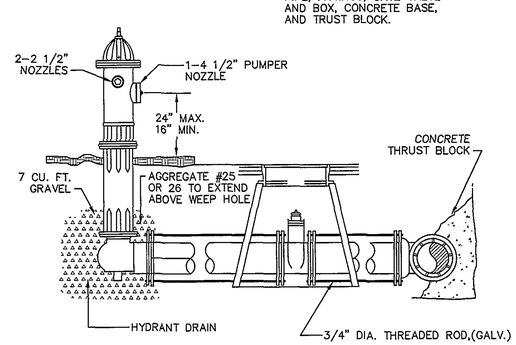

CITY OF ROANOKE STANDARD FIRE HYDRANT DETAIL

NTS

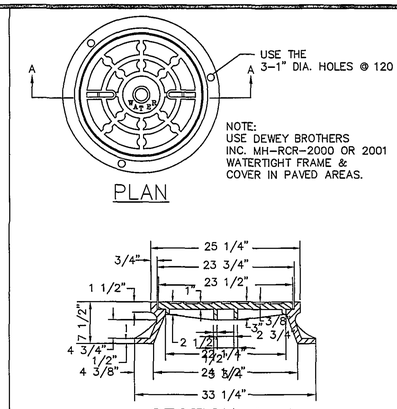

MANHOLE FRAME & COVER

NTS

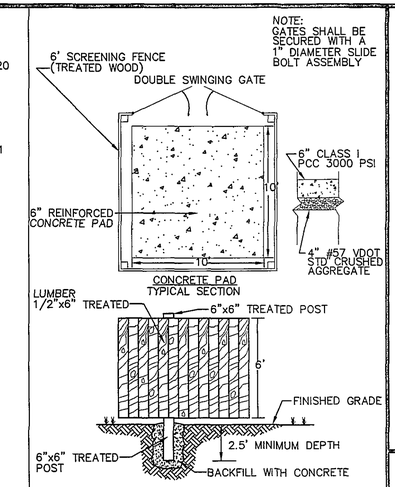

DUMPSTER ENCLOSURE DETAILS

NO SCALE

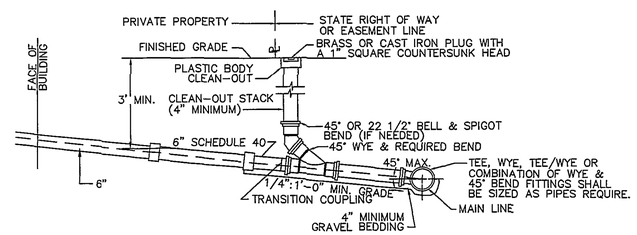

GENERAL NOTES:

1. TRAFFIC BEARING BOX *REQUIRED IN TRAFFIC AREAS.*
2. ALL PIPE AND FITTINGS SHALL BE OF SIMILAR MATERIAL.
3. ALL PIPE SHALL BE OF SAME SIZE (6").
4. NO BENDS ARE ALLOWED IN THE LATERAL FROM THE MAIN TO THE CLEAN-OUT STACK WYE. (EXCEPT AS NOTED)
5. ALL MAIN LINE TAPS ON ACTIVE MAINS WILL BE PERFORMED BY THE CITY OF ROANOKE UTILITY DEPT.
6. MINIMUM COVER FOR ALL SEWER LATERALS SHALL BE THREE (3') FEET.
7. CLEAN-OUT TO EXTEND ABOVE GROUND A MIN. OF 1 FOOT DURING INSTALLATION OF MAIN LINE. PLUMBER SHALL CUT STACK TO FIN. GRADE & REPLACE C.O. BODY & PLUG WHEN BUILDING SEWER IS CONNECTED TO LATERAL (TYP).

SANITARY SEWER LATERAL

NTS

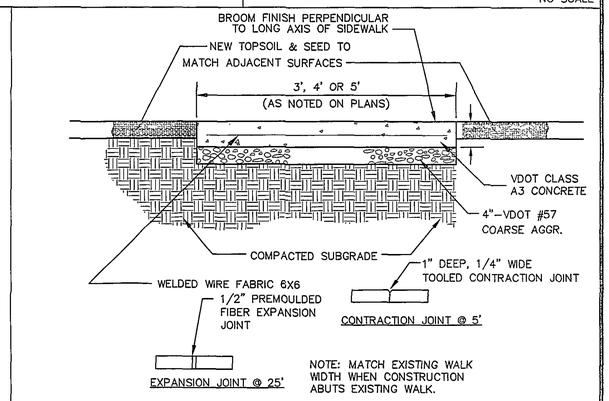

TYPICAL SIDEWALK

NTS

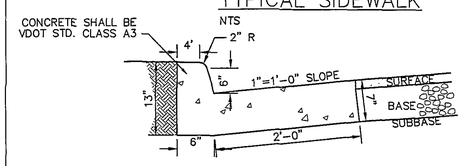

(VDOT STD. CG-6)

STANDARD 6" CURB AND GUTTER (VDOT STD. CG-6)

NTS

FORM AND FILL WITH 3000 P.S.I. CONCRETE

NOTE: APPROVED WATER SEALANT REQUIRED AT ALL JOINTS.

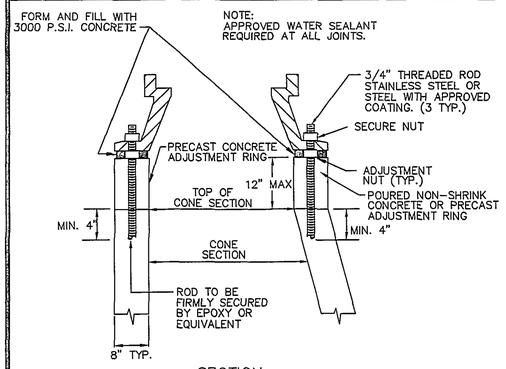

SECTION

INSTALLATION DETAIL FOR ALL FRAMES AND COVERS

NTS

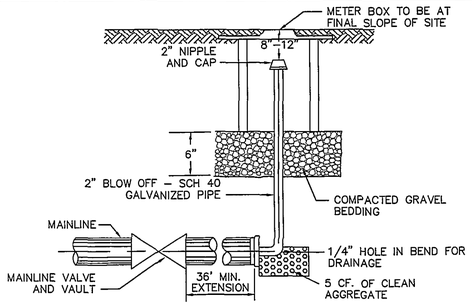

BLOW OFF ASSEMBLY FOR MAINLINE TEMPORARY TERMINATION

NTS

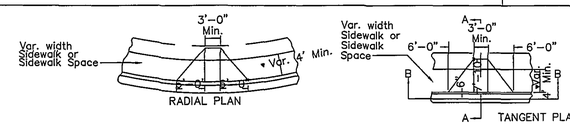

•7" where St'd. CG-3 CG-7 is used.

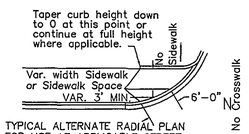

TYPICAL ALTERNATE RADIAL PLAN FOR USE AT APPLICABLE STREET CONNECTIONS AND COMMERCIAL ENTRANCES.

Notes :
All concrete to be VDOT std. class A-3 with non-skid finish. Ramp shall not exceed a maximum slope of 12:1.
Curb ramps are to be located as shown on the plans or as directed by the engineer. They are to be provided at intersections wherever an accessible route • within the right-of-way of a highway facility crosses a curb regardless of whether sidewalk is existing, proposed, or non-existent. They may be offset from pedestrian crosswalks as shown on plans or as directed by the engineer, but should not be located behind vehicle stop lines. Existing light poles, fire hydrants, drop inlets, etc. will also affect placement.
When used in conjunction with Standard CG-3 or CG-7, the curb face on this Standard is to be adjusted to match the mountable curb configuration.

Treatment where width of sidewalk or sidewalk spaces is less than 7'-4".

Accessible route is defined as a continuous, unobstructed, stable, firm, and slip resistant path connecting all accessible elements of a facility that can be approached, entered, and used by persons with mobility impairments.

SIDEWALK AREA (WITH OR WITHOUT BUFFER STRIP)

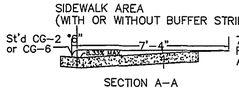

7'-4" IS THE MINIMUM REQUIREMENT TO ACHIEVE A 12:1 SLOPE

SECTION A-A

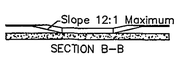

SECTION B-B

HANDICAP RAMP

NTS

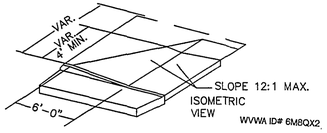

WWW.ID# 6M8QX2

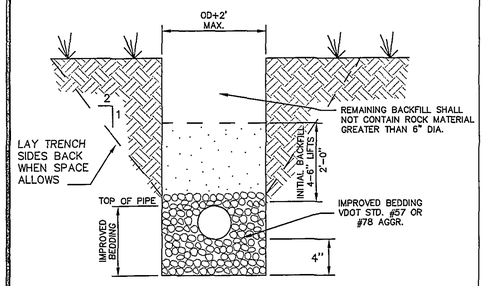

GRAVITY SEWER TRENCH

NTS

LMW P.C.
ENGINEERING · ARCHITECTURE · SURVEYING
102 ALBEMARLE AVE., S.E.
ROANOKE, VIRGINIA 24013
(540) 345-0675
FAX (540) 342-4456

BLUE RIDGE VILLAGE
MULTI-FAMILY HOUSING
DEVELOPMENT
CITY OF ROANOKE, VIRGINIA

NO.	DATE	DESCRIPTION	BY

STANDARD DETAILS

COMMONWEALTH OF VIRGINIA
RICHARD C. WHITE
No. 020021
3-4-04
PROFESSIONAL ENGINEER

Designed By	KER
Drawn By	KER
Checked By	RCW
Approved By	RCW
Submitted By	RCW
Drawing	1389IDETL.DWG
Date	11/22/02
Scale	NONE
Commission No.	1389I
Sheet	10 of 12

C:\projects\1389L\dwg\1389L_detl.dwg