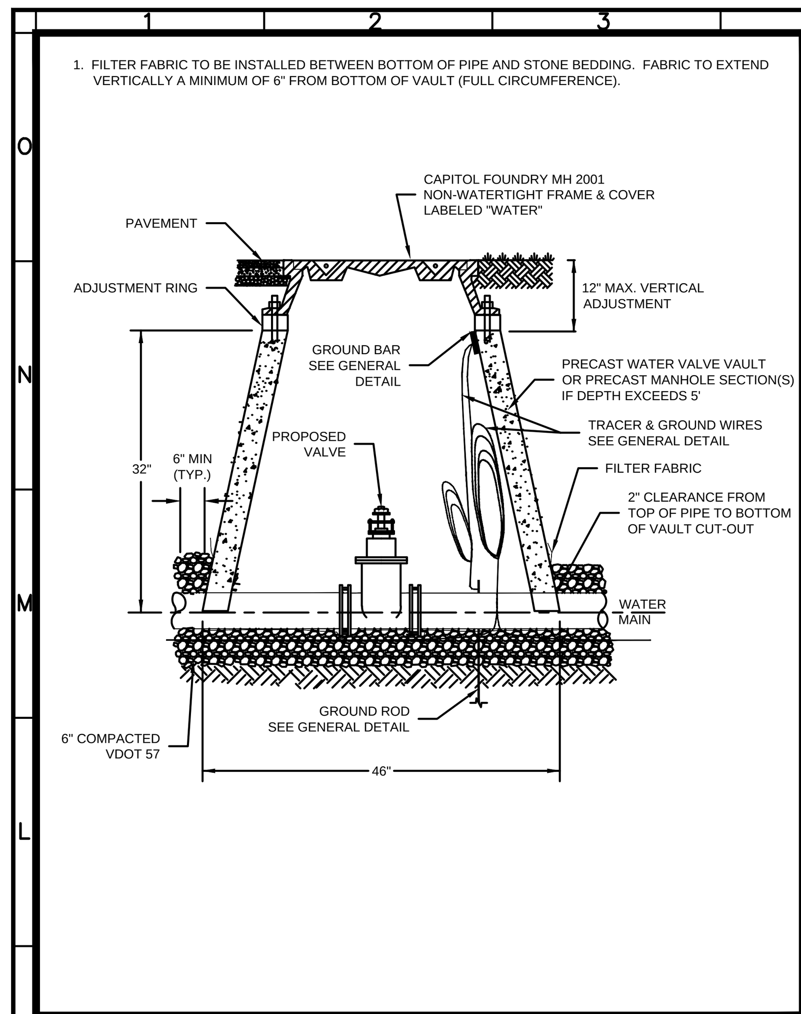

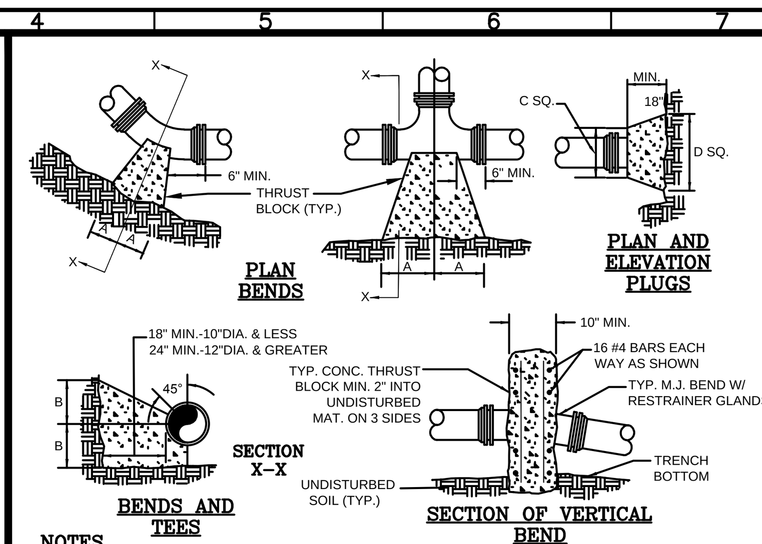

PRESSURE = 200psi
BEARING = 2000psf
FACTOR OF SAFETY = 1.5

PIPE SIZE	90° BEND		45° BEND		22 1/2° BEND		11 1/4° BEND		TEE		PLUG	
	A	B	A	B	A	B	A	B	A	B	C	D
4"	8"	12"	8"	8"	6"	6"	6"	6"	11"	9"	10"	6"
6"	18"	12"	8"	10"	8"	8"	8"	8"	11"	10"	12"	18"
8"	18"	13"	10"	10"	8"	8"	8"	8"	11"	12"	12"	24"
10"	20"	16"	12"	14"	8"	12"	8"	12"	14"	16"	16"	30"
12"	20"	16"	12"	14"	8"	12"	8"	12"	14"	16"	16"	30"
16"	26"	20"	16"	18"	11"	13"	11"	13"	18"	20"	20"	36"
24"	82"	42"	62"	30"	44"	22"	22"	16"	82"	42"	82"	42"
30"	185"	42"	100"	42"	52"	42"	40"	30"	185"	42"	185"	42"

WESTERN VIRGINIA REGIONAL - CONSTRUCTION DETAIL

THRUST BLOCK REQUIREMENTS — W-18 — 02/10/15

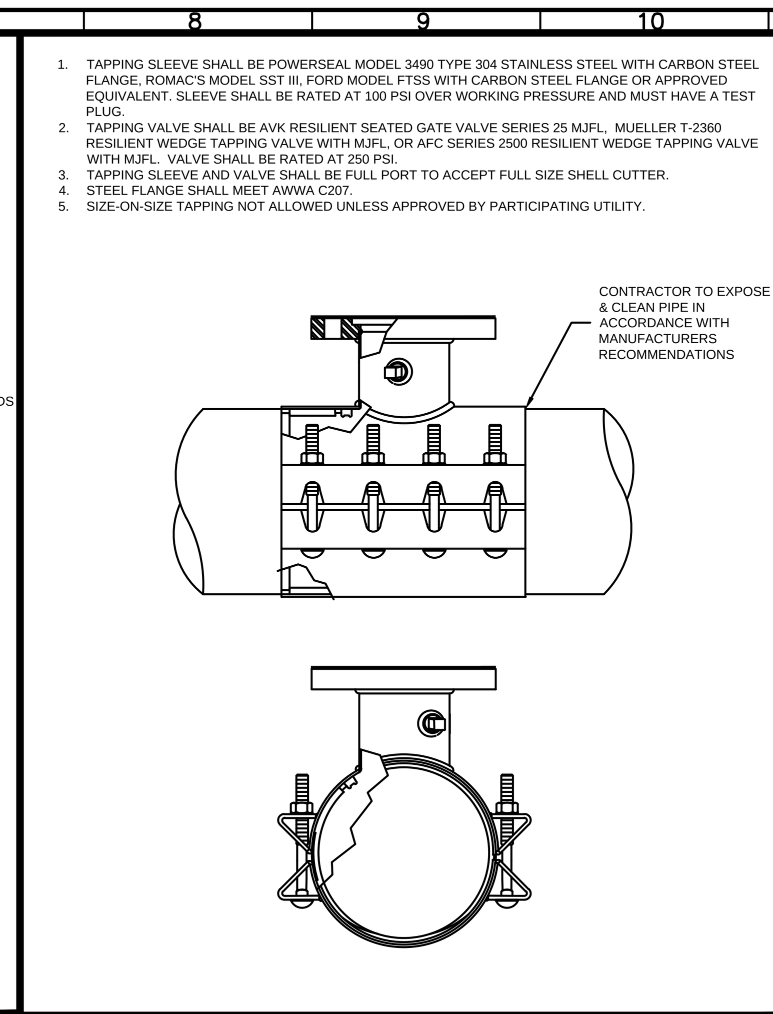

INSTALLATION OF DUCTILE IRON WATER MAINS
TABLE 3 AWWA C600-05
Maximum Joint Deflection Full Length of Pipe - Push on Type Joint

Nominal Pipe Size (inches)	Deflection Angle - θ (degree)	Maximum Offset - S* (Inches): Joint Length 18-Feet	Maximum Offset - S* (Inches): Joint Length 20-Feet	Approximate Radius of Curve - R* Produced by Succession of Joints: Joint Length 18-Feet	Approximate Radius of Curve - R* Produced by Succession of Joints: Joint Length 20-Feet
3	5°	19	21	205	230
4	5°	19	21	205	230
6	5°	19	21	205	230
8	5°	19	21	205	230
10	5°	19	21	205	230
12	5°	19	21	205	230
14	3°	11	12	340	380
16	3°	11	12	340	380
18	3°	11	12	340	380
20	3°	11	12	340	380
24	3°	11	12	340	380
30	3°	11	12	340	380

* SEE FIGURE 4.
For 14-inch and larger push-on joints, maximum deflection angle may be larger than shown above. Consult the manufacturer.

INSTALLATION OF DUCTILE IRON WATER MAINS
TABLE 4 AWWA C600-05
Maximum Joint Deflection Full Length of Pipe - Mechanical Joint Pipe

Nominal Pipe Size (inches)	Deflection Angle - θ (degree)	Maximum Offset - S* (Inches): Joint Length 18-Feet	Maximum Offset - S* (Inches): Joint Length 20-Feet	Approximate Radius of Curve - R* Produced by Succession of Joints: Joint Length 18-Feet	Approximate Radius of Curve - R* Produced by Succession of Joints: Joint Length 20-Feet
3	8°-18"	31	35	125	140
4	8°-18"	31	35	125	140
6	7°-07"	27	30	145	160
8	5°-21"	20	22	195	220
10	5°-21"	20	22	195	220
12	5°-21"	20	22	195	220
14	3°-35"	13.5	15	285	320
16	3°-35"	13.5	15	285	320
18	3°-00"	11	12	340	380
20	3°-00"	11	12	340	380
24	2°-23"	9	10	450	500

* SEE FIGURE 4.

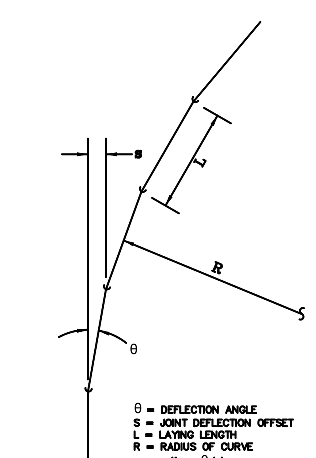

WESTERN VIRGINIA REGIONAL - CONSTRUCTION DETAIL

DUCTILE IRON PIPE DEFLECTION ALLOWANCE TABLES — W-22 — 01/01/14

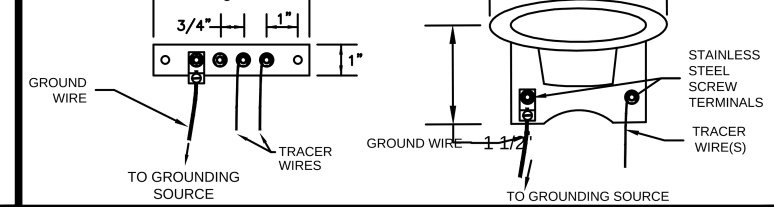

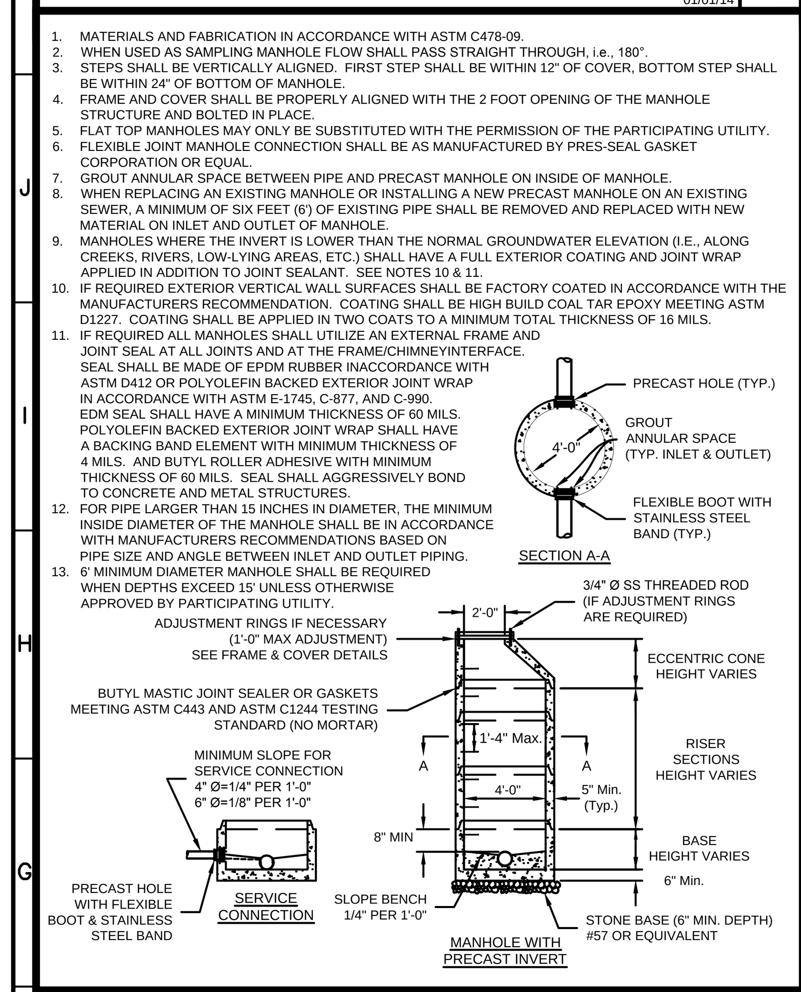

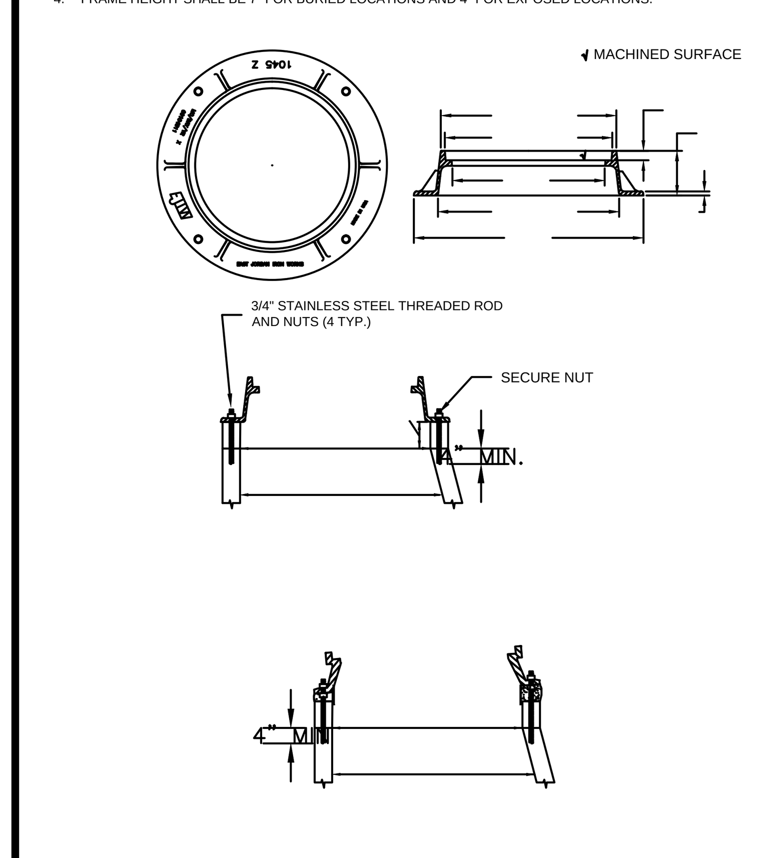

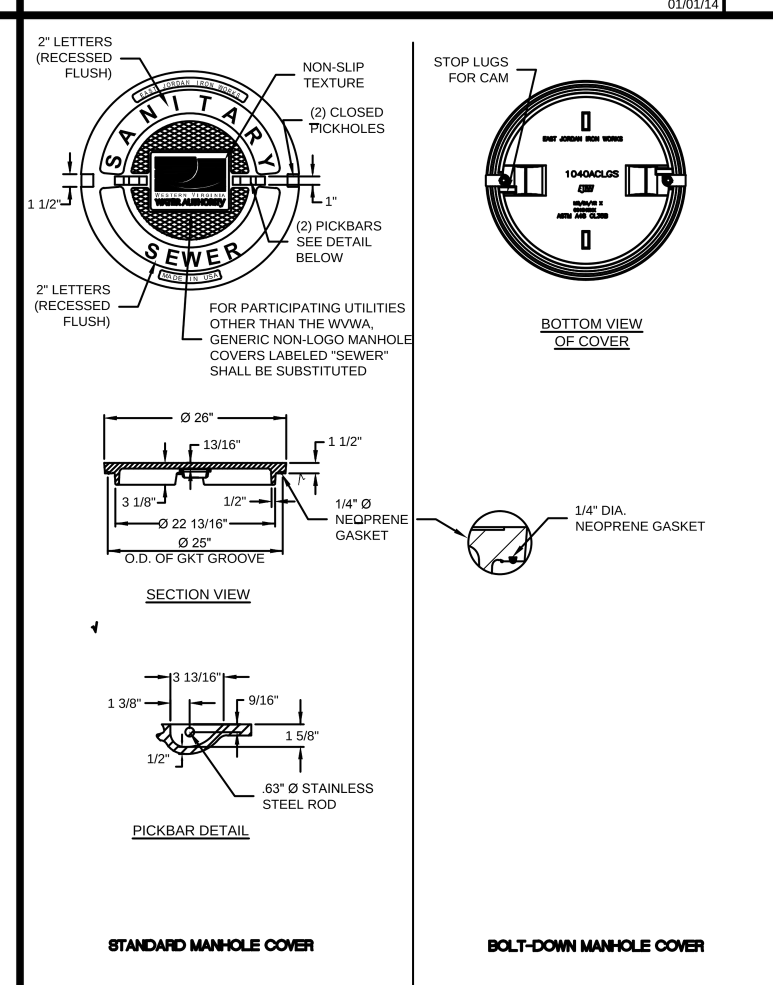

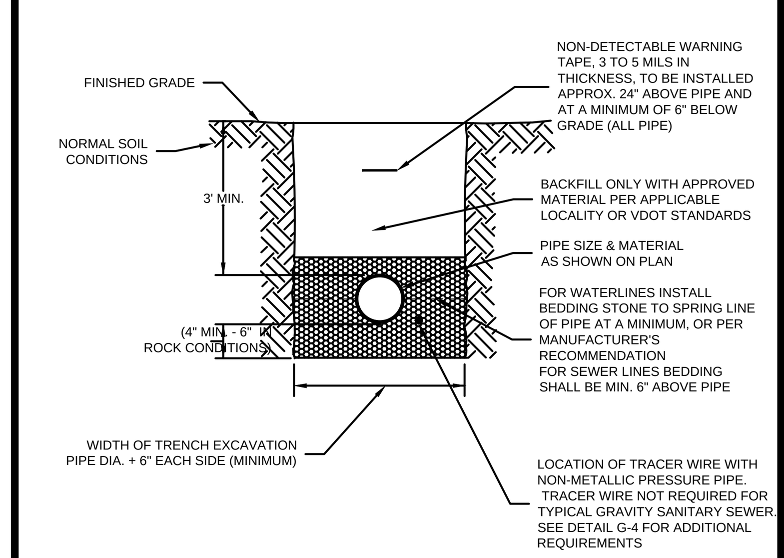

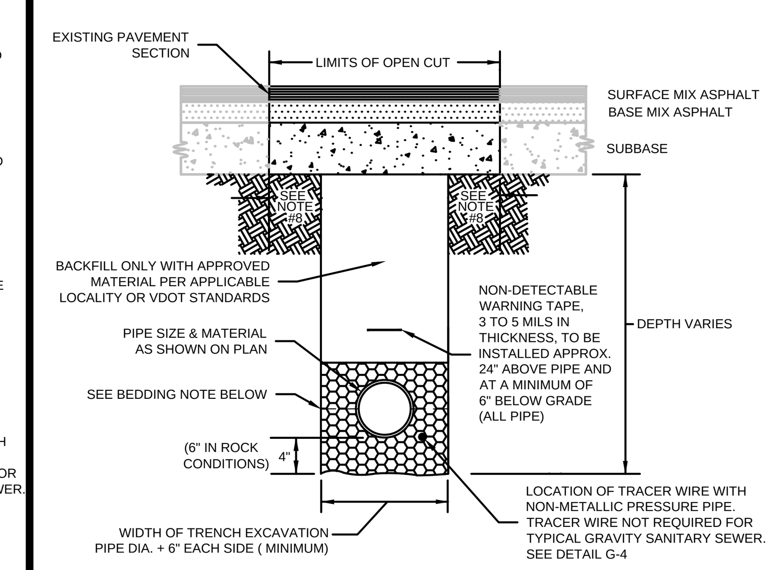

GENERAL UTILITY NOTES

1. SUPPLY AND INSTALL ALL MATERIALS AND METHODS FOR WATERLINES, SANITARY SEWERS AND STORM DRAINAGE IN ACCORDANCE WITH THE SPECIFICATIONS AND REQUIREMENTS OF WVWA AND THE VIRGINIA DEPARTMENT OF TRANSPORTATION "ROAD AND BRIDGE STANDARDS AND SPECIFICATIONS", LATEST EDITION.
2. OBTAIN ALL REQUIRED PERMITS AND NOTIFY APPROPRIATE OFFICIALS 48 HOURS PRIOR TO COMMENCEMENT OF WORK. OBTAIN INFORMATION FROM WVWA CONCERNING PERMITS AND CONNECTIONS TO EXISTING LINES.
3. ALL WORK SHALL BE SUBJECT TO INSPECTION BY THE AUTHORITY HAVING JURISDICTION. NOTIFY APPROPRIATE OFFICIALS PRIOR TO COMMENCEMENT OF WORK.
4. SITE SHALL BE TO SUBGRADE PRIOR TO INSTALLATION OF UTILITIES. ALL UTILITIES SHALL BE IN PLACE PRIOR TO PLACEMENT OF PAVEMENT BASE MATERIAL.
5. USE SELECT MATERIAL FREE FROM FROST, LARGE CLODS, STONES, AND DEBRIS FOR BACKFILL FROM THE BOTTOM OF THE TRENCH TO TWELVE (12) INCHES ABOVE THE PIPE.
6. MINIMIZE ANY DISTURBANCE TO EXISTING WATER SERVICE, SEWER LINES OR ANY OTHER UTILITY DURING CONSTRUCTION AND PROVIDE QUALITY WORKMANSHIP.
7. MAKE ALL PIPE JOINTS IN ACCORDANCE WITH THE MANUFACTURER'S INSTRUCTIONS AND WVWA AND ROANOKE COUNTY SPECIFICATIONS. MAKE JOINTS BETWEEN DIFFERENT PIPE MATERIALS WITH STANDARD FITTINGS MANUFACTURED FOR THE PURPOSE.
8. MAINTAIN ALL WATER LINES AT TEN (10) FEET HORIZONTAL SEPARATION FROM SEWER LINES AND MANHOLES; MEASURE THE DISTANCE EDGE–TO–EDGE. WHEN LOCAL CONDITIONS PREVENT THE DESIRED HORIZONTAL SEPARATION, THE WATERLINE MAY BE LAID CLOSER TO THE SEWER OR MANHOLE PROVIDED THAT THE BOTTOM OF THE WATERLINE SHALL BE AT LEAST EIGHTEEN (18) INCHES ABOVE THE TOP OF THE SEWER. WHERE THIS VERTICAL SEPARATION CANNOT BE OBTAINED, CONSTRUCT THE SEWER OF AWWA APPROVED WATER PIPE AND PRESSURE TREAT IN PLACE PRIOR TO BACKFILLING. THE SEWER MANHOLE SHALL BE OF WATERTIGHT CONSTRUCTION TESTED IN PLACE.
9. THE CONTRACTOR SHALL BE RESPONSIBLE FOR MAKING THE WATER AND SEWER CONNECTIONS. THE WVWA SHALL BE NOTIFIED PRIOR TO ANY CONNECTION TO PUBLIC WATER AND SEWER LINES.
10. REFER TO ARCHITECTURAL PLANS FOR EXACT LOCATIONS WHERE UTILITIES ENTER THE BUILDING.
11. EXISTING UTILITY LOCATIONS SHOWN ARE A RESULT OF FIELD SURVEYS, AND AVAILABLE RECORDS. LOCATIONS ARE APPROXIMATE. GENERAL CONTRACTOR SHALL VERIFY THE LOCATION AND ELEVATION OF ALL UNDERGROUND UTILITIES SHOWN ON THE PLANS IN AREAS OF CONSTRUCTION PRIOR TO STARTING WORK. CONTACT THE ENGINEER IMMEDIATELY IF: 1) ANY LOCATION OR ELEVATION IS DIFFERENT FORM THAT SHOWN ON THE PLANS. 2) IF THERE APPEARS TO BE ANY CONFLICT. UPON DISCOVERY OF ANY UTILITY NOT SHOWN ON THE PLANS. G.C. SHALL CALL "MISS UTILITY" OF VIRGINIA.
12. PRIOR TO COMMENCING WITH ANY UNDERGROUND PIPE CONSTRUCTION OR GRADING (EXCAVATION), THE GENERAL CONTRACTOR SHALL CALL MISS UTILITY OF VIRGINIA (TOLL FREE 1–800–552–7001) AT LEAST 48 HOURS PRIOR TO COMMENCING. THE G.C. IS RESPONSIBLE FOR ANY DAMAGE CAUSED TO ANY UTILITY, PUBLIC OR PRIVATE, AS A RESULT OF NOT CONTACTING MISS UTILITY AND SHALL BE REPAIRED AT NO ADDITIONAL COST TO THE OWNER/DEVELOPER.
13. PROVIDE A CONTINUOUS AND UNIFORM BEDDING IN THE TRENCH FOR ALL PIPE. REMOVE STONES AND ROCKS FOUND IN THE TRENCH FOR A DEPTH OF AT LEAST SIX (6) INCHES BELOW THE BOTTOM OF THE PIPE AND TAMP SELECT FILL BEDDING PROVIDED. AFTER THE PIPE HAS BEEN PLACED IN THE TRENCH, BACKFILL THE TRENCH WITH SELECT MATERIAL, THOROUGHLY COMPACT TO 90% (95% UNDER PAVEMENT OR CONCRETE SLAB) OF THE STANDARD PROCTOR (ASTM D–698) USING CARE NOT TO DAMAGE THE PIPE. USE VDOT STANDARD PB–1 TRENCH FOR STORM SEWER AND UB–1 FOR SANITARY SEWER AND WATER.
14. PLACE BACKFILL FOR ALL UTILITIES IN ACCORDANCE WITH WVWA AND ROANOKE COUNTY SPECIFICATIONS, AND THE FOLLOWING CRITERIA: 1) BACKFILL NO TRENCH UNTIL AUTHORIZED BY THE AUTHORITY HAVING JURISDICTION. MATERIALS USED FOR BACKFILL FROM THE BOTTOM OF THE TRENCH TO TOP OF THE PIPE SHALL BE CRUSHER RUN, OR APPROVED EQUAL MATERIAL. THOROUGHLY AND CAREFULLY COMPACT THE BACKFILL MATERIAL. 2) COMPACT BACKFILL BY MECHANICAL TAMPING THROUGHOUT THE DEPTH OF THE TRENCH TO INSURE A SUITABLE SUBBASE ACCEPTABLE TO THE ROAD ENGINEER. IF THE MATERIAL TAKEN FROM THE DITCH IS NOT SUITABLE FOR BACKFILLING, REMOVE IT AND USE AN ACCEPTABLE MATERIAL FOR BACKFILLING THE TRENCH.
15. IN AREAS OF WATER LINE CONSTRUCTION, GRADES SHALL BE WITHIN SIX (6) INCHES OF FINAL GRADE PRIOR TO BEGINNING CONSTRUCTION.
16. THE GENERAL CONTRACTOR SHALL MAKE ALL CONNECTIONS TO EXISTING WATER MAINS. WVWA SHALL BE NOTIFIED PRIOR TO THIS WORK.
17. THE CONTRACTOR SHALL INSTALL ALL WATER SERVICE CONNECTIONS AND METER BOXES.
18. WATER AND SANITARY SEWER PIPES AND FITTINGS SHALL BE POLYVINYL IN ACCORDANCE WITH WVWA SPECIFICATIONS AND STANDARDS.
19. CONNECT PIPE TO MANHOLES THROUGH PRE CAST OPENINGS AND JOIN WITH EITHER A FLEXIBLE BOOT ADAPTER OR A PIPE SEAL GASKET.

BALZER AND ASSOCIATES INC
REFLECTING TOMORROW
www.balzer.cc
Roanoke
New River Valley
Richmond
Staunton
Harrisonburg
RESIDENTIAL LAND DEVELOPMENT ENGINEERING
SITE DEVELOPMENT ENGINEERING
LAND USE PLANNING & ZONING
LANDSCAPE ARCHITECTURE
LAND SURVEYING
ARCHITECTURE
STRUCTURAL ENGINEERING
TRANSPORTATION ENGINEERING
ENVIRONMENTAL & SOIL SCIENCE
WETLAND DELINEATIONS & STREAM EVALUATIONS
Balzer and Associates, Inc.
1208 Corporate Circle
Roanoke, VA 24018
540-772-9580
FAX 540-772-8050

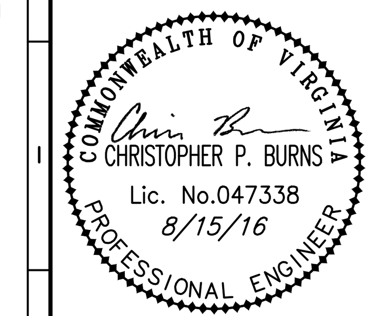

GREENFIELD SHELL BUILDING
INTERNATIONAL PARKWAY
WVWA NOTES & DETAILS
BOTETOURT COUNTY, VIRGINIA

DRAWN BY LAR
DESIGNED BY LAR
CHECKED BY CPB
DATE 7/17/2015
SCALE N/A

REVISIONS:
8/7/2015
10/2/2015
12/21/2015
5/10/2016
5/25/2016
8/31/2016

SHEET NO. C8

JOB NO. R1400042.00