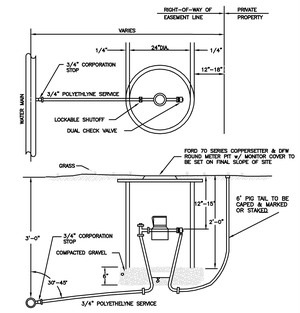

1) FORD METER SETTERS MUST BE USED BY CONTRACTOR.
2) METERS MUST NOT BE INSTALLED IN BOTTOM OF DITCH.
3) METERS PROVIDED AND INSTALLED BY BOTETOURT COUNTY UTILITY DEPARTMENT.
4) METERS WILL BE SENSUS SRII WATER METERS
5) SADDLES MUST BE USED WITH ALL PLASTIC & CLASS 50 DUCTILE IRON PIPE.

SINGLE RESIDENTIAL WATER SERVICE
DWG NO. WDD-01

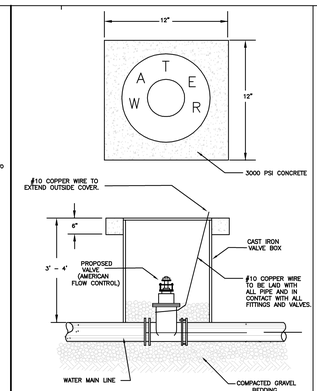

NOTE: USE TRENCH ADAPTOR FOR DEPTHS GREATER THAN 5 FEET.

STANDARD VALVE BOX INSTALLATION
DWG. No. WDD-04

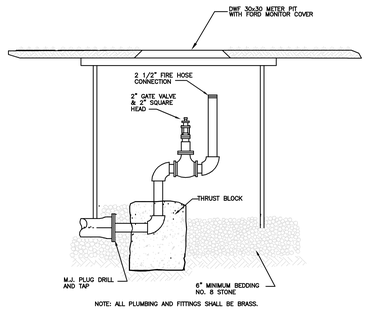

NOTE: ALL PLUMBING AND FITTINGS SHALL BE BRASS.

PERMANENT END OF LINE
DWG. No. WDD-06

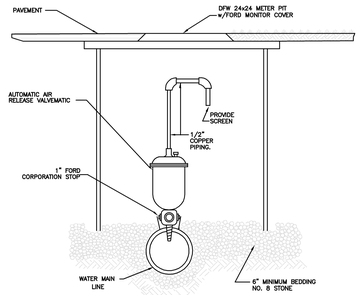

AUTOMATIC AIR RELEASE ASSEMBLY
DWG. No. WDD-08

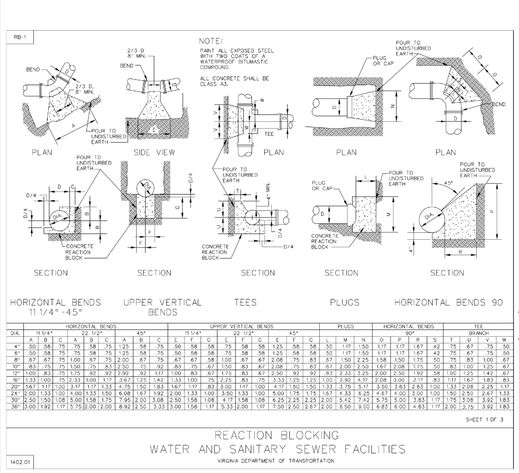

DIA.	HORIZONTAL BENDS 11 1/4°				22 1/2°				45°				UPPER VERTICAL BENDS 11 1/4°				22 1/2°				45°				PLUGS				HORIZONTAL BENDS 90°				TEE BRANCH			
	A	B	C	A	B	C	A	B	C	A	B	C	A	B	C	A	B	C	A	B	C	A	B	C	L	M	N	O	P	R	S	T	U	V	W
4"	.50	.58	.75	.75	.58	.75	1.25	.58	.75	.50	.58	.75	.75	.58	.75	.75	.58	.75	1.25	.58	.75	.50	.58	.75	.50	1.07	1.50	1.17	1.17	1.67	42	.75	.67	.75	.50
6"	.50	.58	.75	.75	.58	.75	1.25	.58	.75	.50	.58	.75	.75	.58	.75	.75	.58	.75	1.25	.58	.75	.50	.58	.75	.50	1.07	1.50	1.17	1.17	1.67	42	.75	.67	.75	.50
8"	.67	.67	.75	1.00	.67	.75	2.00	.67	.75	.67	.67	.58	1.00	.67	.67	2.08	.67	.83	2.08	.75	.83	.67	.58	2.25	1.50	2.25	1.58	1.50	1.75	1.75	50	.75	.83	1.00	.67
10"	.83	.75	.75	1.50	.75	.83	2.50	.75	.92	.83	.75	.92	1.50	.83	.67	2.58	.75	.83	2.58	.83	.92	.83	.75	.92	2.00	2.50	1.67	2.08	1.75	2.00	50	.83	1.00	1.25	.67
12"	1.00	.83	.75	1.50	.92	.83	3.00	.92	.92	1.00	.83	.92	1.50	.92	.83	3.00	.92	.92	3.00	.92	.92	1.00	.83	.92	2.50	3.25	2.25	2.58	2.00	2.50	50	1.00	1.25	1.42	.83
16"	1.50	1.17	1.00	2.33	1.17	1.33	4.75	1.17	1.42	1.50	1.17	1.42	2.33	1.17	1.00	4.17	1.17	1.50	4.17	1.17	1.50	1.50	1.17	1.42	3.75	5.17	3.00	3.83	2.83	3.50	50	1.50	1.67	1.92	1.00
20"	1.67	1.17	1.00	2.33	1.17	1.33	4.75	1.50	1.83	1.67	1.17	1.83	2.50	1.17	1.00	4.17	1.50	1.50	4.17	1.50	1.50	1.67	1.17	1.83	3.75	5.17	3.00	3.83	2.83	4.00	50	1.67	2.08	2.25	1.33
24"	2.00	1.33	1.00	4.00	1.33	1.50	6.08	1.67	1.92	2.00	1.33	1.00	3.50	1.33	1.00	5.00	1.75	1.75	1.75	1.67	4.33	6.25	4.67	4.00	5.00	7.00	4.00	5.00	3.50	5.00	50	2.00	2.50	2.67	1.33
30"	2.50	1.50	1.08	5.00	1.58	1.75	7.95	2.00	3.08	2.50	1.58	1.08	4.17	1.58	1.08	6.25	2.25	2.25	2.25	2.00	5.42	7.42	5.75	5.00	6.33	8.67	5.00	6.33	4.33	6.33	50	2.50	3.08	3.92	1.83
36"	3.00	1.92	.17	5.75	2.00	2.00	8.92	2.50	3.33	3.00	1.58	.17	5.33	2.00	.17	7.50	2.50	2.67	2.00	2.50	6.50	9.00	6.83	6.00	4.83	.17	2.00	7.75	3.92	1.83	50	3.00	3.75	4.75	2.00

PIPE SIZE	PIPE MAT'L	90° BEND	45° BEND	22 1/2° BEND	11 1/4° BEND	VALVE /PLUG	TEE BRANCH	REDUCER (NOTE 2)	VERT. 45°	VERT. 22 1/2°	VERT. 11 1/4°
6"	D.I.	28'	12'	6'	3'	35'	34'	20'	23'	11'	5'
8"	D.I.	37'	15'	7'	4'	51'	47'	21'	30'	15'	7'
10"	D.I.	45'	19'	9'	4'	61'	57'	20'	37'	18'	9'
12"	D.I.	53'	22'	11'	5'	73'	69'	38'	43'	21'	10'
6"	PVC	30'	12'	6'	3'	56'	38'	29'	35'	17'	8'
8"	PVC	40'	16'	8'	4'	74'	56'	31'	46'	22'	11'
10"	PVC	47'	20'	9'	5'	89'	82'	30'	56'	27'	13'
12"	PVC	56'	23'	11'	6'	106'	88'	56'	66'	32'	16'

1. ALL JOINTS SHALL BE RESTRAINED ON BOTH SIDES OF THE FITTING FOR THE LENGTH SHOWN UNLESS OTHERWISE INDICATED.
2. REDUCER IS ONE SIZE SMALLER THAN PIPE LISTED. RESTRAINED LENGTH IS UPSTREAM ON THE LARGE SIDE OF THE REDUCER.

THRUST RESTRAINT OF PIPE JOINTS DESIGN LENGTHS
DWG. No. WDD-12

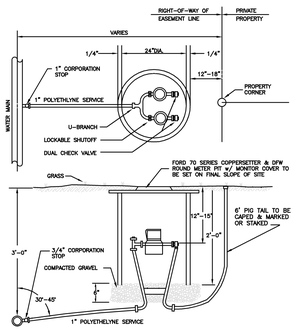

1) FORD METER SETTERS MUST BE USED BY CONTRACTOR.
2) METERS MUST NOT BE INSTALLED IN BOTTOM OF DITCH.
3) METERS PROVIDED AND INSTALLED BY BOTETOURT COUNTY UTILITY DEPARTMENT.
4) METERS WILL BE SENSUS SRII WATER METERS
5) SADDLES MUST BE USED WITH ALL PLASTIC & CLASS 50 DUCTILE IRON PIPE.

DOUBLE RESIDENTIAL WATER SERVICE
DWG NO. WDD-03

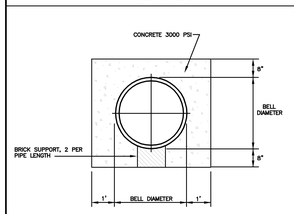

CONCRETE ENCASED PIPE

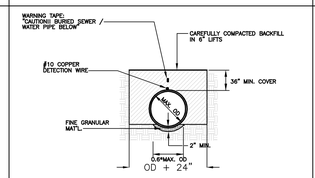

NOTES:
1. WHERE THE TRENCH BOTTOM IS IN ROCK, IT SHALL BE OVERDUG TO A MINIMUM OF 6" BELOW THE BELL DIAMETER OF THE PIPE AND BACKFILLED WITH SUITABLE BEDDING MATERIAL.
2. WHERE PIPE FOUNDATIONS ARE YIELDING, PIPE SHALL BE BEDDED ON A MINIMUM OF 8" SUITABLE BEDDING MATERIAL.
3. SHAPE TRENCH BOTTOM FOR PIPE BARREL, JOINTS, AND FITTINGS TO PROVIDE CONTINUOUS SUPPORT AND NO POINT LOADING OF PIPE, JOINTS, AND FITTINGS.
4. FOR PIPE LESS THAN 12" DIA., TRENCH WIDTH MAY BE 24".
5. ALL PIPE LINES SHALL HAVE DETECTION TAPE APPROXIMATELY 18" ABOVE PIPE.

BEDDING DETAIL – WATER

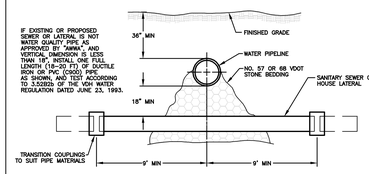

WATER PIPELINE CROSSING ABOVE SEWER OR LATERAL

WATER PIPELINE CROSSING SANITARY SEWER OR "HOUSE" LATERAL

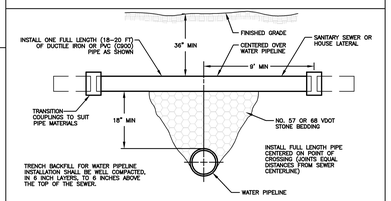

WATER PIPELINE CROSSING BELOW SEWER OR LATERAL

NOTES:
(1) MAIN BODY OF HYDRANT MUST BE PAINTED RED WITH COLOR CODED CAPS PER FLOW RATE.
(2) DISTANCE "A" WITH CURB AND GUTTER, 2' MIN., 4' MAX. FROM BACK OF CURB.
(3) DISTANCE "A" WITHOUT CURB AND CUTTER,
(4) AREA AROUND HYDRANT AT A RADIUS OF 4' TO BE APPROXIMATELY LEVEL AND UNOBSTRUCTED FOR ROAD CONSTRUCTION.

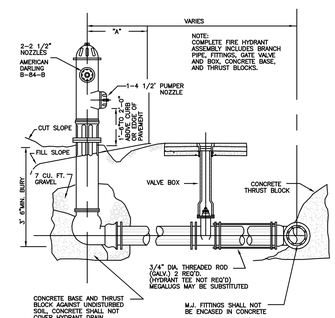

FIRE HYDRANT ASSEMBLY
DWG. No. WDD-10

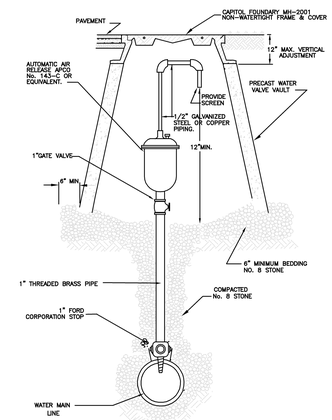

AUTOMATIC AIR RELEASE ASSEMBLY FOR DEEP WATER LINES
DWG. No. WDD-9

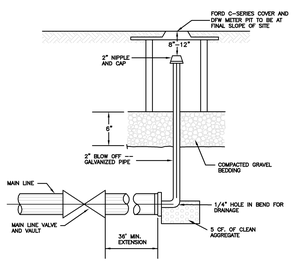

BLOW OFF ASSEMBLY FOR MAIN LINE TEMPORARY TERMINATION
DWG. No. WDD-07

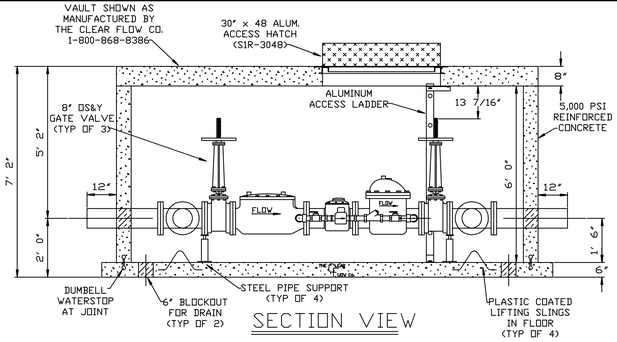

NOTES:
1. CLEAR FLOW VAULT SHIPPED WITH TOP LOOSE, HEAVIEST LIFT APPROXIMATELY 45,000 LBS.
2. 8" SENSUS FIRELINE FIRE SERVICE METER ASSEMBLY (FM-720) (UL APPROVED STRAINER)
3. ASSEMBLY BY CLEAR FLOW OR APPROVED EQUAL.
4. METER SHALL BE EQUIPPED WITH TOUCH READ.

8" FIRE SERVICE MASTER METER WITH BYPASS VAULT ASSEMBLY
NOT TO SCALE

FOR REFERENCE ONLY

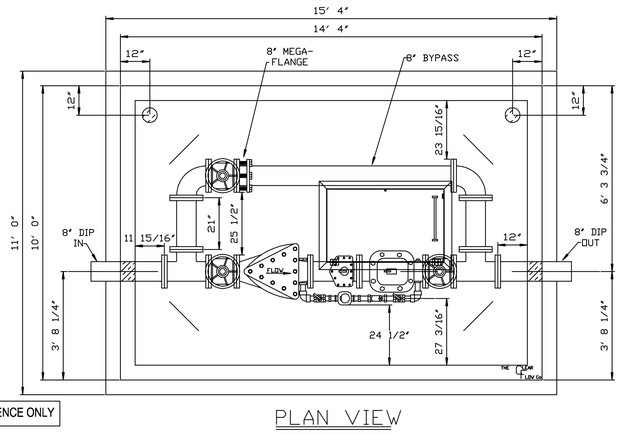

WATER TESTING REQUIREMENTS:

1. ALL NEW WATER MAINS SHALL BE TESTED, AFTER BACKFILLING, TO A HYDROSTATIC PRESSURE OF NOT LESS THAN 100 PSI ABOVE THE DESIGN WATER PRESSURE FOR THE SYSTEM OR 150 PSI, WHICHEVER IS GREATER. TESTING PROCEDURE AND ALLOWABLE LEAKAGE SHALL BE ACCORDING TO THE BOTETOURT COUNTY WATER SPECIFICATIONS SECTION 102.04.

2. AFTER PRESSURE TESTING AND BEFORE FINAL INSPECTION OF THE COMPLETED SYSTEMS, WATER MAINS AND SERVICE LATERALS SHALL BE FLUSHED AND DISINFECTED IN ACCORDANCE WITH AWWA SPECIFICATION C651 LATEST REVISIONS. TESTING PROCEDURE AND REQUIREMENTS SHALL BE IN ACCORDANCE WITH BOTETOURT COUNTY WATER STANDARDS SECTION 105.0.

WATER VAULT COORDINATION NOTE:

1. WATER VAULT SHALL BE PROVIDED AND INSTALLED BY BOTETOURT COUNTY.

2. CONTRACTOR SHALL CONNECT TO PIPE STUBS FROM WATER VAULT INSTALLED BY COUNTY.

3. COUNTY SHALL COORDINATE ORDERING AND INSTALLATION OF WATER VAULT AFTER PAYMENT OF CONNECTION FEE.

4. SIGNIFICANT LEAD TIME FOR ORDERING AND INSTALLATION OF MAY BE NECESSARY. CONTRACTOR SHALL COORDINATE WITH COUNTY AS QUICKLY AS POSSIBLE TO MINIMIZE DELAYS.

5. THE MAINLINE METER VAULT WILL NOT BE SET UNTIL AFTER ALL APPLICABLE WATER AND SEWER CONNECTION FEES ARE PAID IN FULL.

MENU

CADD VERSION
ACADR-14
PLOT SCALE
1:1
PLOT DATE
COMM NO.
DRAWING NO.

KEYPLAN

ENGINEERING CONCEPTS, INC.
20 South Roanoke St.
Fincastle, Virginia 24090
540.473.1253 540.473.1254(Fax)
email@engineeringconcepts.com
ECI PROJECT #02019

GENERAL NOTES

COMMONWEALTH OF VIRGINIA
ROBERT H. VAMPLER, JR.
No. 34713
11/12/03
PROFESSIONAL ENGINEER

PROJECT TITLE

The Glebe

SFCS Architecture Engineering Planning Interiors
SFCS Inc. ▪ 305 South Jefferson Street
Roanoke, Virginia 24011.2003
540.344.6664 ▪ Fax 540.343.6925
www.sfcs.com

PROJECT DESIGNER	: SFCS
PROJECT ARCHITECT	: SFCS
PROJECT ENGINEER	: ECI
DRAWN BY	: ECI
CHECKED BY	: ECI
APPROVED BY	: ECI

NO.	REVISION DESCRIPTION	DATE

DRAWING TITLE
WATER NOTES AND DETAILS

COMM. NO.	DATE
97115.00	11/12/03
DRAWING	SHEET
C34	34 OF 43