LITHONIA LIGHTING

Catalog Number	Type
KAD-150M R4 120 SPD04	
Notes: BOYS & GIRLS CLUB	

CONTOUR Soft Square Cutoff Lighting

KAD

METAL HALIDE
70W-400W
HIGH PRESSURE SODIUM
70W-400W
20' to 35' Mounting

Specifications

EPA: 1.2 ft.²
*Weight: 35.9 lbs (16.28 kg)
Length: 17-1/2" (44.5 cm)
Width: 17-1/2" (44.5 cm)
Depth: 7-1/8 (181 cm)
*Weight as configured in example below.

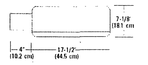

FEATURES & SPECIFICATIONS

INTENDED USE
Ideal for parking areas, school lighting, walkways and car lots.

CONSTRUCTION
Rugged die-cast, soft corner aluminum housing with 0.12" nominal wall thickness. Die-cast door frame has impact resistant, tempered, glass lens that is fully gasketed with one piece tubular silicone.

FINISH
Standard finish is dark bronze (DDB) polyester powder finish, with other architectural colors available.

OPTICAL SYSTEM
Anodized, aluminum hydroformed reflectors: IES full cutoff distributions R2 (asymmetric), R3 (asymmetric), R4 (forward throw) and RGC (separate arm interchangeable. High-performance anodized, segmented aluminum reflectors: IES full cutoff distributions SR2 (asymmetric), SR3 (asymmetric) and SR4SF (forward throw, sharp cutoff). Segmented reflectors attach with tool less fasteners and are rotatable and interchangeable.

ELECTRICAL SYSTEM
Ballast: High reactance, high power factor for 70-150W. Constant wattage autotransformer for 175-400W. Metal halide 150W and below are standard with pulse-start ignitor technology; super CWA pulse-start ballast required for 200W, 320W and 350W (CWA optional). Ballast in copper material and 100% factory tested.
Socket: Porcelain, horizontally oriented medium base socket for 70-150W and mogul base socket for 175W and above, with copper alloy, nickel plated or non-shell and center contact. Isolated 15kV, 60kV.

LISTING
UL Listed (standard). CSA Certified (see Options). UL listed for 25°C ambient and wet locations. IP65 rated in accordance with standard IEC 529.

Specifications subject to change without notice.

ORDERING INFORMATION

For shortest lead times, configure product using **standard options (shown in bold)**
Example: KAD 400M R3TB SPD04 LPI

KAD

Series	Wattage	Voltage	Mounting	Ballast	Options	Lamp[10]
KAD	Metal halide: 250W[1,2] 350W[1,2] **100M**[1] 150S[1] **150M**[1] **175M**[1] **200M**[1] **250M** **320M**[1] **350M**[1] **400M**[1] High pressure sodium: 70S[1] 100S **150S**[1] **250S** **400S**	120 208[1] 240[1] 277 347 480[1] **TB**[2] TBV[2] 230SDHZ[13]	Type / Length[11] / Arm: **SPD Square pole 84 4" arm 86 8" arm 89 9" arm** RPD Round pole 12 12" arm; WBD Wall bracket; WWD Wood pole or wall; DAD12P Degree arm (pole)[12]; DAD12WB Degree arm (wall)[12]; WBA Decorative wall bracket[12,13]; KMA Mast arm external filter; KTMB Twin mounting bar	(blank) **Magnetic ballast**; CWI Constant wattage isolated; **Pulse Start Metal Halide** SCWA Super CWA pulse start ballast	Stipend installed in fixture: SF Single fuse (120, 277, 347V)[14]; DF Double fuse (208, 240, 480)[14]; PD Power tap[15]; PER NEMA twist-lock receptacle only (no photocontrol); QRS Quartz restrike system[16]; QRSTD QRS time-delay[3,16]; WTB Terminal wiring block[15]; HS House-side shield; CSA Certified. Shipped separately[17]: PE1 NEMA twist-lock PE (120, 208, 240V); PE3 NEMA twist-lock PE (347V); PE4 NEMA twist-lock PE (480V); PE7 NEMA twist-lock PE (277V); SC Shorting cap for PER option; VG Vandal guard; WG Wire guard	**LPI Lamp included**; **LAP Less lamp**; Finish[18]: (blank) **Dark bronze**; **DWH White**; **DBL Black**; **DMB Medium bronze**; **DNA Natural aluminum**

Distribution

Hydroformed, reflectors:
R2 IES type II asymmetric[4]
R3 IES type III asymmetric[5]
R4 IES type IV forward throw[6]
RKS IES type V square

Segmented, reflectors:
SR2 IES type II asymmetric[4]
SR3 IES type III asymmetric[5]
SR4SC IES type IV forward throw

NOTES:
1 Not available with SCWA.
2 Not available with MBV.
3 Not available with TBV.
4 Must be ordered with SCWA.
5 Rule-of-thumb EB20 required for SR2, SR3 and SR4SC optics.
6 House side shield available.
7 Must specify CWI for use in Canada.
8 Optional multi-tap ballast (120, 208, 240, 277V; in Canada: 120, 277, 347V).
9 Optional fixed tap ballast (120, 208, 240, 277, 480V).
10 Consult factory for available wattages.
11 "9" arm is supplied when two or more arms are specified oriented on a 90° drilling pattern.
12 Ships separately.
13 Available with SPD04 and SPD05.
14 Most specify voltage. N/A with TB.
15 Only available with SR2, SR3, & SR4SC optics.
16 Max allowable wattage lamp included.
17 May be ordered as an accessory.
18 See www.lithonia.com/finishes for additional color options.
19 Must be specified.
20 Must use RPD19

Tenon Mounting Slipfitter

Tenon O.D.	One	Two@180°	Two@90°	Three@120°	Three@90°	Four@90°
2-3/8"	T25-190	T25-280	T25-260[20]	T25-320[20]	T25-360[20]	T25-460[20]
2-7/8"	T25-190	T25-280	T25-290[20]	T25-320	T25-290[20]	T25-490[20]
4"	T35-190	T35-280	T35-290[20]	T35-320	T35-360[20]	T35-490[20]

Accessories
Order as separate catalog number.
Installed in fixture:
KADVG Vandal guard
KADWG Wire guard

Outdoor

Shoot 2 KAD.indd 4 1/1/07

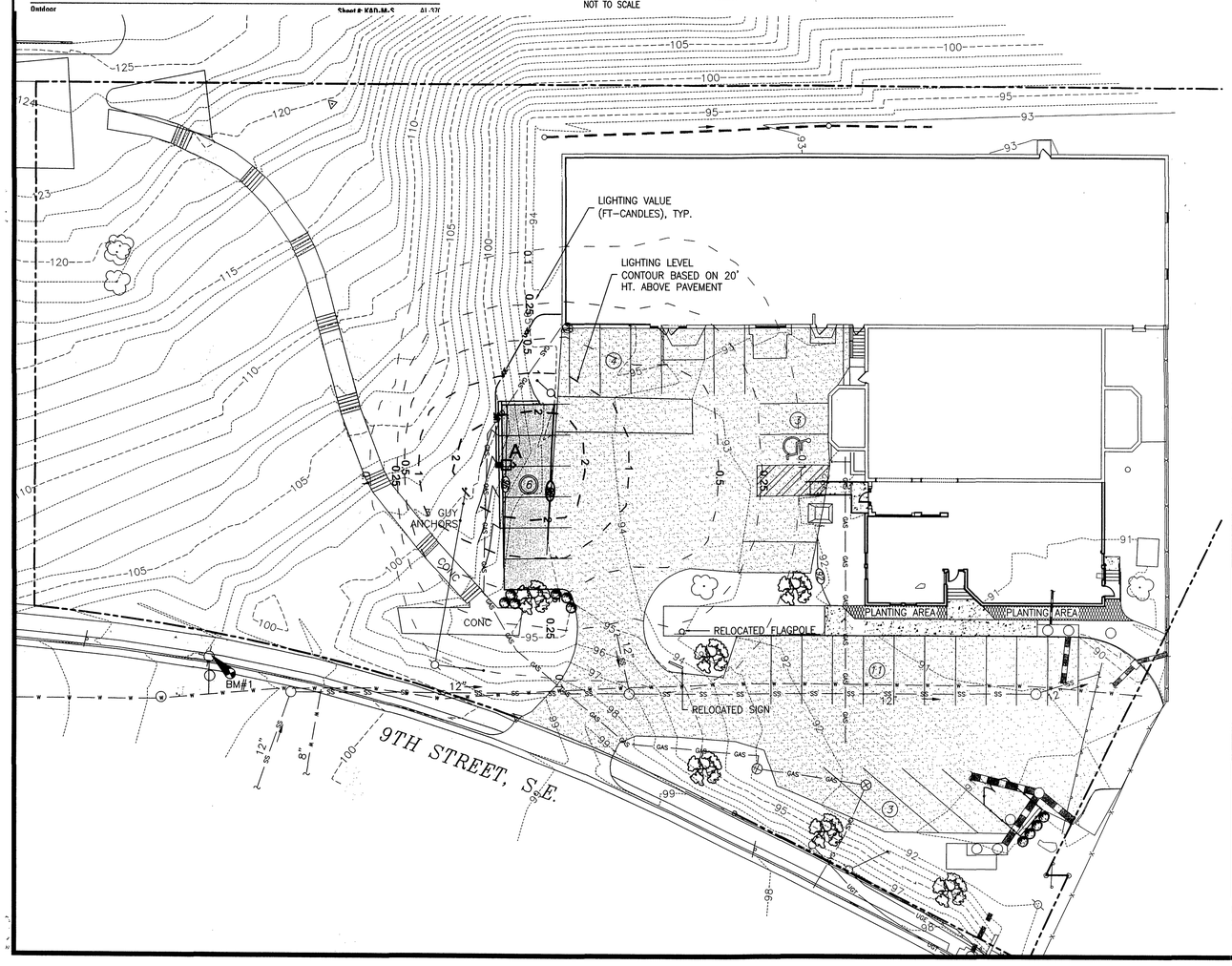

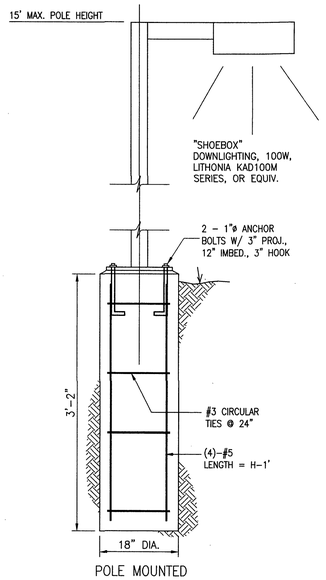

POLE MOUNTED

SITE LIGHTING FIXTURES

NOT TO SCALE

LUMINAIRE SCHEDULE

Symbol Label	Qty	Catalog No.	Description	Lamp	Lumens	LLF
A	1	KAD 150M R4 120	DIE CAST SHOEBOX WITH CUT-OFF LENSE	ONE 150-WATT CLEAR E-17 METAL HALIDE, HORIZONTAL POS.	8500	1.00

LIGHTING NOTES

1. Coordinate exterior lighting locations and installation with proposed landscaping.
2. Indicated parking lot lighting based upon a 15' maximum pole mounted height (20' max, above pavement).
3. Indicated parking lot lighting will not spill onto adjoining property.

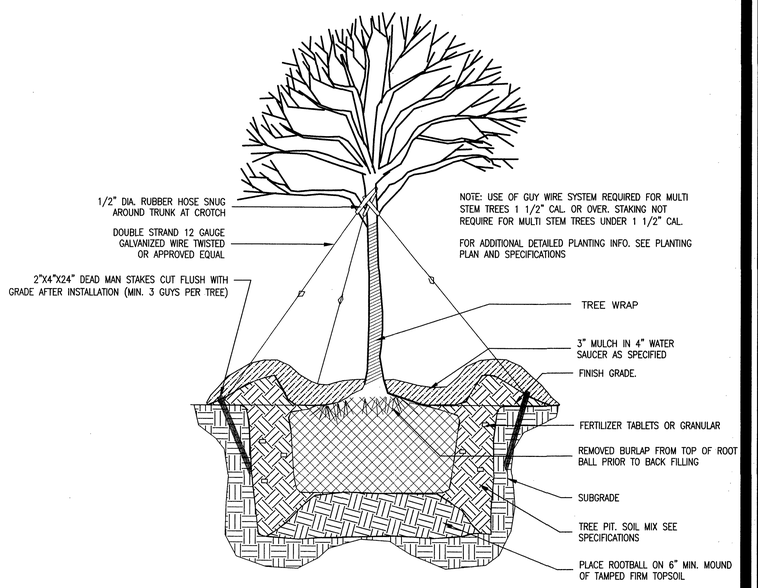

TYPICAL TREE PLANTING– WIRE GUYING

NOT TO SCALE

LANDSCAPE NOTES

1. ALL SHRUBS TO BE PLANTED IN A MULCH BED. WHERE NOT SHOWN, BEDLINES SHALL FOLLOW LAYOUT OF THE PLANT MATERIAL.
2. ALL PLANT BEDS AND TREES SHALL BE MULCHED TO A 4" DEPTH.
3. ALL TREES ALONG THE PERIMETER OF THE PARKING AREAS SHALL BE A MINIMUM OF 4' FROM THE EDGE OF PAVEMENT.
4. REQUIRED EVERGREEN SHRUBS SHALL HAVE A MINIMUM HEIGHT OF 24" AT THE TIME OF PLANTING.
5. ALL REQUIRED DECIDUOUS TREES SHALL HAVE A MINIMUM CALIPER OF 2" AT TIME OF PLANTING.
6. LANDSCAPING CONTRACTOR SHALL FIELD VERIFY LOCATION AND EXTENTS OF ALL UNDERGROUND UTILITIES PRIOR TO COMMENCING PLANTING OPERATIONS.
7. SPECIAL CARE SHALL BE TAKEN IN THE VICINITY OF EXISTING UTILITIES SO AS NOT TO DAMAGE OR DISTURB THE UTILITIES. ALL TREES AND SHRUBS (ROOTBALL INCLUDED) SHALL HAVE A MINIMUM OF 18" VERTICAL SEPARATION FROM ANY UNDERGROUND UTILITY.
8. ALL MULCHED & INDICATED LANDSCAPED AREAS SHALL BE INFILLED WITH ASSORTED PERENNIALS SELECTED BY OWNER.

LANDSCAPING TABULATION

LOCATION	REQUIREMENT	PROVIDED
STREET YARD TREES	MIN. 1 LARGE DECIDUOUS TREE PER EACH FIFTY (50) FEET OF STREET FRONTAGE, EXCLUSIVE OF PARKING AREA LANDSCAPING; 70' BUILDING FRONTAGE/50 = 2 TREES REQ'D	2 TREES PROVIDED
PARKING AREA ALONG FRONT OF PUBLIC STREET	MIN. 1 LARGE DECIDUOUS TREE PER EACH THIRTY (30) FEET OF STREET FRONTAGE; 18' NEW PERIMETER FRONTAGE/30 = 1 TREE; REQUIRED EVERGREEN SHRUBS AT A RATE OF 3' o.c. 18'/3 =6 SHRUBS REQ'D	1 TREE PROVIDED 6 SHRUBS PROVIDED
DEVELOPMENT OF 21 OR MORE PARKING SPACES	NOT REQUIRED FOR ONLY 6 NEW SPACES	
OVERALL TREE CANOPY REQUIREMENTS	NONE REQUIRED FOR CN ZONING	
ADDITIONAL PLANTINGS FOR STORMWATER MGMT. WAIVER	NO RECOMMENDATIONS	3 TREES PROVIDED

PLANT SCHEDULE

SYMBOL	DESCRIPTION	MIN. HEIGHT @ PLANTING	MIN. CALIPER @ PLANTING	COMMON PLANT NAME
	SMALL EVERGREEN SHRUB	24"		GREEN LUSTER HOLLY
	CANOPY TREE		2"	PIN OAK

NOTE: ALTERNATE TREES AND SHRUBS MAY BE SUBSTITUTED FOR THE LISTED SPECIES PROVIDED THE SUBSTITUTIONS ARE LISTED ON THE CITY OF ROANOKE'S APPROVED PLANT LIST (TABLE 642-1 OF ZONING ORDINANCE) AND ARE APPROVED BY THE CITY PRIOR TO INSTALLATION.

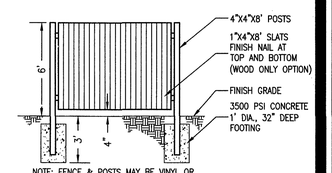

NOTE: FENCE & POSTS MAY BE VINYL OR STAINED PT LUMBER PER OWNER'S DISCRETION

WOOD DUMPSTER SCREEN FENCE

NOT TO SCALE

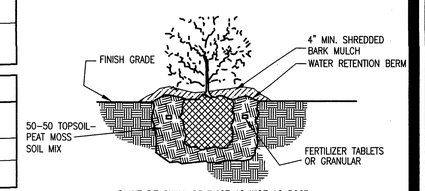

PLANT PIT SHALL BE TWICE AS WIDE AS ROOT BALL AND A MINIMUM OF 6" DEEPER

TYPICAL SHRUB PLANTING

NOT TO SCALE

COMMONWEALTH OF VIRGINIA
SEAN C. GOLDSMITH
Lic. No. 032949
10/31/07
PROFESSIONAL ENGINEER

Revisions By	Date
SCG – RkeCityCmmts	10/31/07

PROVIDENCE engineering
819 Naff Road
Boones Mill, VA 24065
Ph: (540) 334-4294
Fax: (540) 334-4293
Email: providence@metwood.com

LANDSCAPE & LIGHTING PLAN

ADDITIONS & IMPROVEMENTS
BOYS & GIRLS CLUB OF ROANOKE VALLEY
CITY OF ROANOKE, VIRGINIA

Scale:	1"=20'
Date:	9/18/07
Design By:	SCG
CAD By:	SCG
Checked By:	
Comm. No.:	07107

Sheet No.
C5