NOTES:

1. ALL MANHOLE FRAMES AND COVERS SHALL BE DEWEY BROTHERS, INC. MH-RCR-3000W IN NON-PAVED AREAS REQUIRING WATERTIGHT FRAME & COVERS AND MH-RCR-3000EC-WT IN PAVED AREAS, OR APPROVED EQUAL.
2. STEPS TO BE VERTICALLY ALIGNED.
3. THE FRAME AND COVER SHALL BE PROPERLY ALIGNED WITH THE 2 FOOT OPENING OF THE MANHOLE STRUCTURE AND BOLTED IN PLACE.
4. ALL SAMPLING MANHOLES SHALL BE CONSTRUCTED AS PER MANHOLE DETAILS. WHEN NECESSARY, THE FLAT TOP MANHOLE MAY BE SUBSTITUTED. WITH ECCENTRIC OPENING AT STEPS.

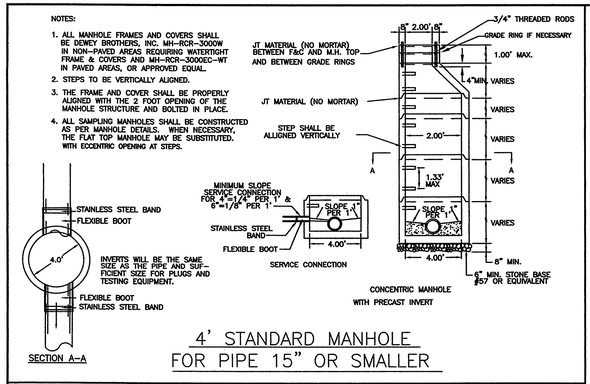

4' STANDARD MANHOLE FOR PIPE 15" OR SMALLER

Pipe Diameter (in.)	Min. Time (mins sec)	Length for Min. Time (ft)	Time for Longer Length (sec)	Specified Time for Length (L) Shown (mincsec)							
				100 ft	150 ft	200 ft	250 ft	300 ft	350 ft	400 ft	450 ft
4	3:46	597	.380 L	3:46	3:46	3:46	3:46	3:46	3:46	3:46	3:46
6	5:40	398	.854 L	5:40	5:40	5:40	5:40	5:40	5:40	5:42	6:24
8	7:34	298	1.520 L	7:34	7:34	7:34	7:34	7:36	8:52	10:08	11:24
10	9:26	239	2.374 L	9:26	9:26	9:26	9:53	11:52	13:51	15:49	17:48
12	11:20	199	3.418 L	11:20	11:20	11:24	14:15	17:05	19:56	22:47	25:38
15	14:10	159	5.342 L	14:10	14:10	17:48	22:15	26:42	31:09	35:36	40:04
18	17:00	133	7.692 L	17:00	19:13	25:38	32:03	38:27	44:52	51:16	57:41
21	19:50	114	10.470 L	19:50	26:10	34:54	43:37	52:21	61:00	69:48	78:31
24	22:40	99	13.674 L	22:47	34:11	45:34	56:58	68:22	79:46	91:10	102:33
27	25:30	88	17.306 L	28:51	43:16	57:41	72:07	86:32	100:57	115:22	129:48
30	28:20	80	21.366 L	35:37	53:25	71:13	89:02	106:50	124:38	142:26	160:15
33	31:10	72	25.852 L	43:05	64:38	86:10	107:43	129:16	150:43	172:21	193:53
36	34:00	66	30.768 L	51:17	76:55	102:34	128:12	153:50	179:29	205:07	230:46

MINIMUM SPECIFIED TIME REQUIRED FOR A 1.0 PSIG PRESSURE DROP FOR SIZE AND LENGTH OF PIPE INDICATED FOR Q = 0.0015

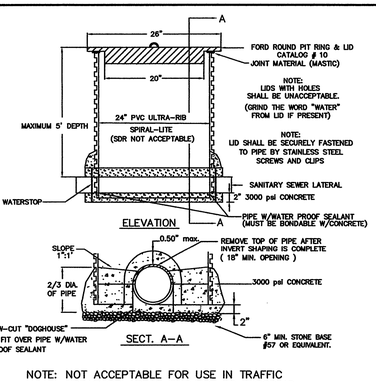

NOTE: NOT ACCEPTABLE FOR USE IN TRAFFIC AREAS OR AREAS SUBJECT TO FLOODING.

SAMPLING STRUCTURE DETAIL

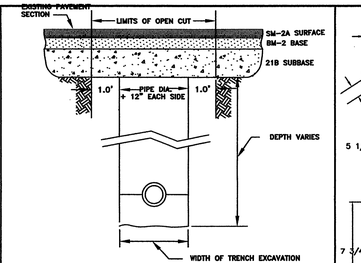

A. THE CONTRACTOR SHALL REPLACE THE OPEN CUT WITH A MINIMUM TOP COURSE, 2" VDOT SM-2A, BASE COURSE, 3" VDOT BM-2, AND SUBBASE, 8" VDOT 21B.
B. ALL CONSTRUCTION WITHIN THE PUBLIC RIGHT-OF-WAY SHALL BE AS SPECIFIED OR AS REQUIRED BY VDOT.
C. ALL EXPOSED EDGES OF EXISTING BITUMINOUS SURFACE COURSE SHALL BE PRIMED WITH A MATERIAL SATISFACTORY TO THE DIRECTOR BEFORE THE BITUMINOUS MIXTURES ARE REPLACED. EDGES OF TRENCH SHALL BE CUT TO A STRAIGHT LINE PRIOR TO PAVING.
D. THE BACKFILL IN THE TRENCH SHALL BE SUITABLE AND THOROUGHLY COMPACTED IN 6-INCH LAYERS BY TAMPING OR BY OTHER APPROVED METHOD BEFORE THE OPENING IS PAVED. NO EXCAVATIONS UNDER THE EXISTING PAVEMENT WILL BE PERMITTED. SHEETING OR SHORING SHALL BE USED WHEN REQUIRED BY THE DEPTH OF THE TRENCH OR TYPE OF MATERIAL IN ACCORDANCE WITH VIRGINIA O.S.H.A. STANDARDS.

PAVEMENT REPLACEMENT OPEN CUT ROADWAY

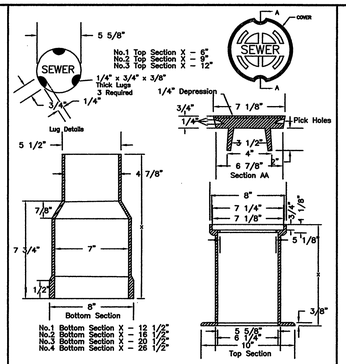

NOTE: A MINIMUM CLEARANCE OF 4 INCHES IS REQUIRED BETWEEN CLEANOUT CAP AND TOP OF COVER.

TRAFFIC BEARING CLEANOUT BOX

GENERAL NOTES:

1. TRAFFIC BEARING BOX REQUIRED IN TRAFFIC AREAS.
2. ALL PIPE AND FITTINGS SHALL BE OF SIMILAR MATERIAL.
3. ALL PIPE SHALL BE OF SAME SIZE.
4. NO BENDS ARE ALLOWED IN THE LATERAL FROM THE MAIN TO THE CLEAN-OUT STACK WYE. (EXCEPT AS NOTED)
5. ALL MAIN LINE TAPS ON ACTIVE MAINS WILL BE PERFORMED BY ROANOKE COUNTY UTILITY DEPT.
6. PIPING BEHIND CLEANOUT TO BE INSTALLED PER BOCA CODE.
7. MINIMUM LATERAL SIZE: 4" FOR RESIDENTIAL SERVICE 6" FOR NON-RESIDENTIAL SERVICE
8. MINIMUM COVER FOR ALL SEWER LATERALS SHALL BE THREE (3') FEET

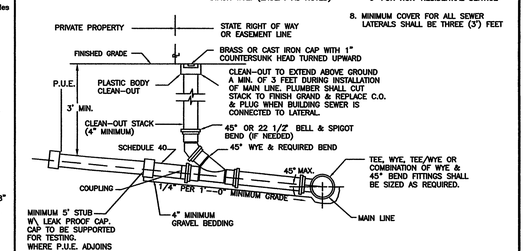

SANITARY SEWER LATERAL

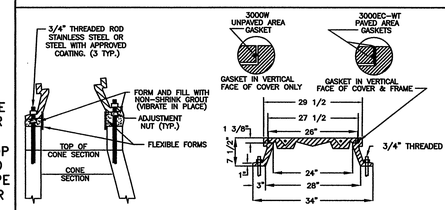

INSTALLATION DETAIL FOR SLOPE ADJUSTMENT

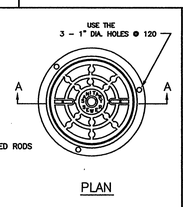

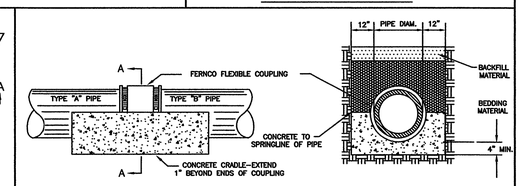

JOINING DISSIMILAR PIPE

GENERAL NOTES:

1. TRAFFIC BEARING BOX REQUIRED IN TRAFFIC AREAS.
2. ALL PIPE AND FITTINGS SHALL BE OF SIMILAR MATERIAL.
3. ALL PIPE SHALL BE OF SIZE SHOWN.
4. NO BENDS ARE ALLOWED IN THE LATERAL FROM THE MAIN TO THE CLEAN-OUT STACK WYE. (EXCEPT AS NOTED)
5. ALL MAIN LINE TAPS ON ACTIVE MAINS WILL BE PERFORMED BY ROANOKE COUNTY UTILITY DEPT.
6. PIPING BEHIND CLEANOUT TO BE INSTALLED PER BOCA CODE.
7. MINIMUM COVER FOR ALL SEWER LATERALS SHALL BE THREE (3') FEET

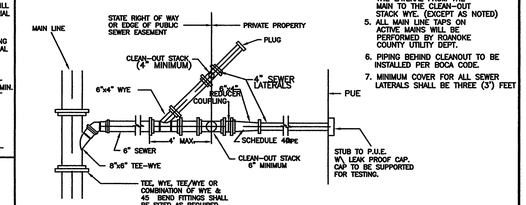

COMBINED 6" BY TWO 4" LATERALS

NOTES:

1. ALL MANHOLE FRAMES AND COVERS SHALL BE DEWEY BROTHERS, INC. MH-RCR-3000W IN NON-PAVED AREAS REQUIRING WATERTIGHT FRAME & COVERS AND MH-RCR-3000EC-WT IN PAVED AREAS.
2. STEPS TO BE VERTICALLY ALIGNED.
3. THE ENTIRE MANHOLE STRUCTURE, INCLUDING FRAME AND COVER SHALL BE INSTALLED BEFORE CUTTING THE TOP OF THE SEWER PIPE IN THE MANHOLE. ROANOKE COUNTY PERSONNEL TO BE PRESENT DURING INSTALLATION.
4. THE FRAME AND COVER SHALL BE PROPERLY ALIGNED WITH THE 2 FOOT OPENING OF THE MANHOLE STRUCTURE AND BOLTED IN PLACE.
5. RISER AND OTHER SECTIONS SHALL NOT BE INSTALLED FOR A MINIMUM OF 24 HOURS AFTER POURING OF BASE,BENCH, & INVERT.

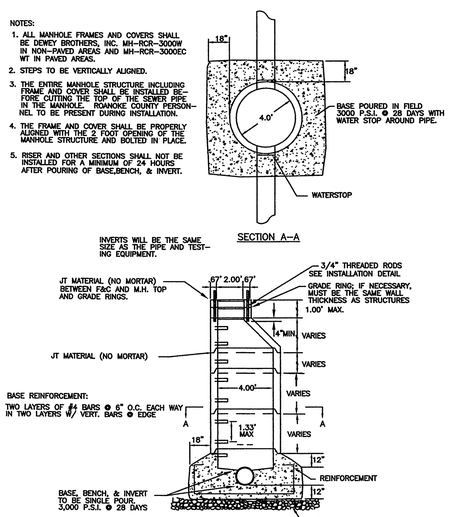

STRADDLE MANHOLE FOR PIPE 15" OR SMALLER

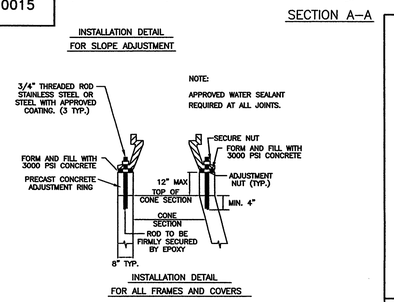

WATERTIGHT MANHOLE FRAME AND COVER

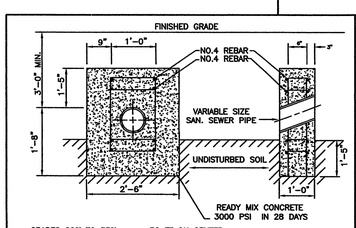

GRADES 20% TO 35% -- 36 FT ON CENTER
* GRADES 35% TO 50% -- 24 FT ON CENTER
* GRADES 50% TO 60% -- 16 FT ON CENTER
* WITH WRITTEN APPROVAL OF UTILITY DIRECTOR

ANCHOR BLOCK

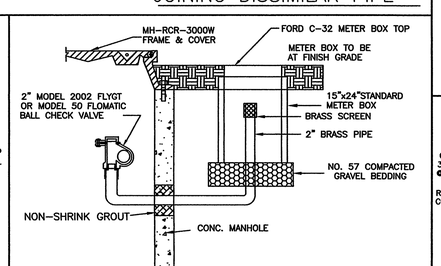

TYPE 2 MANHOLE VENT

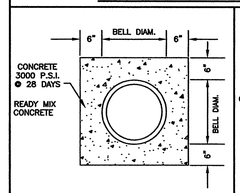

CONCRETE ENCASED PIPE

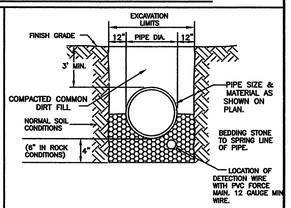

STONE BEDDING

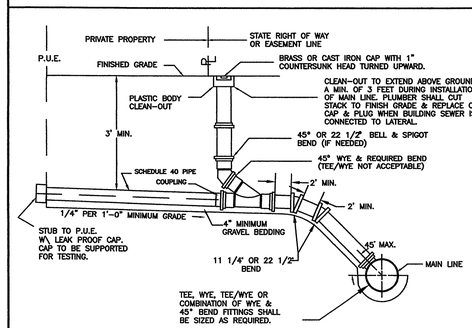

GENERAL NOTES:

1. TRAFFIC BEARING BOX REQUIRED IN TRAFFIC AREAS.
2. ALL PIPE AND FITTINGS SHALL BE OF SIMILAR MATERIAL.
3. ALL PIPE SHALL BE OF SAME SIZE.
4. NO BENDS ARE ALLOWED IN THE LATERAL FROM THE MAIN TO THE CLEAN-OUT STACK WYE. (EXCEPT AS NOTED)
5. ALL MAIN LINE TAPS ON ACTIVE MAINS WILL BE PERFORMED BY ROANOKE COUNTY UTILITY DEPT.
6. PIPING BEHIND CLEANOUT TO BE INSTALLED PER BOCA CODE.
7. MINIMUM LATERAL SIZE: 4" FOR RESIDENTIAL SERVICE 6" FOR NON-RESIDENTIAL SERVICE
8. MINIMUM COVER FOR ALL SEWER LATERALS SHALL BE THREE (3') FEET

SANITARY SEWER LATERAL FOR DEEP SEWER

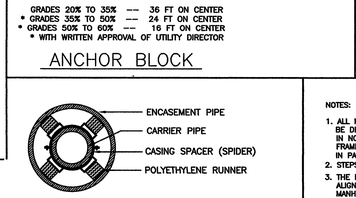

ALTERNATE PIPE SUPPORT IN CASING PIPE:

18" LONG TREATED TIMBER SKIDS OF APPROPRIATE WIDTH SO THAT BELLS OR FLANGES DO NOT REST ON CASING WITH MORE THAN 3/4" FREE PLAY. SKIDS TO BE PLACED AT 4'-0" O.C. AND SECURED WITH 2"x 1/4" GALV. STEEL STRAPS OR 1" S.S. BANDS. SOAP-BASED LUBRICANT MAY BE USED FOR SLIDING OF SKID WITH DUCTILE IRON PIPE AND FLAX-BASED LUBRICANT MAY BE USED FOR SLIDING OF SKID WITH PVC PIPE.

NOTE: A 1" DRAIN WILL BE REQUIRED ON THE LOWER END OF THE CASING IF THE CASING ENDS ARE SEALED WITH MORTER AND BRICK.

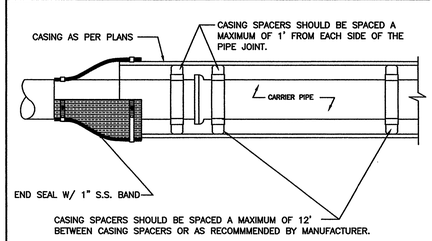

PIPE SUPPORT IN CASING PIPE

NOTES:

1. ALL MANHOLE FRAMES AND COVERS SHALL BE DEWEY BROTHERS, INC. MH-RCR-3000W IN NON-PAVED AREAS REQUIRING WATERTIGHT FRAME & COVERS AND MH-RCR-3000EC-WT IN PAVED AREAS, OR APPROVED EQUAL.
2. STEPS TO BE VERTICALLY ALIGNED.
3. THE FRAME AND COVER SHALL BE PROPERLY ALIGNED WITH THE 2 FOOT OPENING OF THE MANHOLE STRUCTURE AND BOLTED IN PLACE.

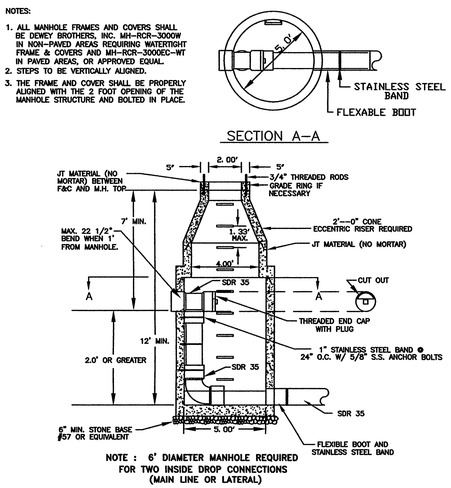

NOTE : 6' DIAMETER MANHOLE REQUIRED FOR TWO INSIDE DROP CONNECTIONS (MAIN LINE OR LATERAL)

MAINLINE OR LATERAL DROP MANHOLE (FOR USE WITH PVC PIPE)

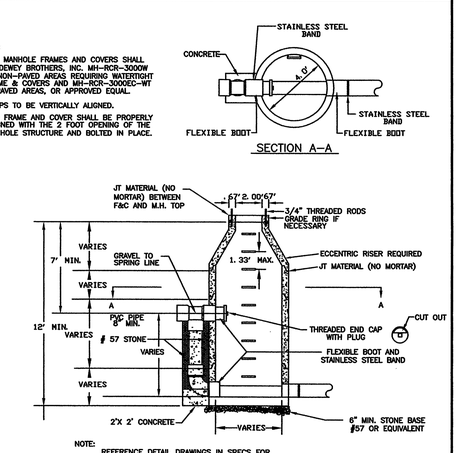

NOTE: REFERENCE DETAIL DRAWINGS IN SPECS FOR DROP CONNECTION USING DUCTILE IRON PIPE.

OUTSIDE DROP MANHOLE (FOR USE WITH PVC PIPE)

FOR ADDITIONAL REFERENCE, SEE DETAIL DRAWINGS IN SEWER STANDARDS.

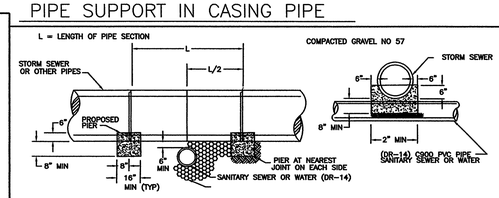

NOTE:

1. PIER REQUIRED WHEN STORM DRAIN OR OTHER PIPES CROSSES OVER THE OTHER UTILITY WITH A VERTICAL CLEARANCE OF LESS THAN 18".
2. PIER TO BE BUILT ON UNDISTURBED EARTH.
3. CONCRETE TO BE READY MIX, CLASS A3.

CONCRETE PIER

ROANOKE, VA
CVS STORE #6296

WVWA ID# 6QGM9D

Kimley-Horn and Associates, Inc.
© 2005
1500 FOREST AVENUE, SUITE 115
RICHMOND, VIRGINIA 23229

CONSULTANT:
KIMLEY-HORN AND ASSOC.
1500 FOREST AVENUE
TEL (804) 673-3882
FAX (804) 673-3980

SEAL:
COMMONWEALTH OF VIRGINIA
PHILIP CHANG
No. 041539
1/18/06
PROFESSIONAL ENGINEER

CVS/pharmacy
11,945 S.F. PROTOTYPE
STORE NUMBER: #6296
INTERSECTION OF PETERS CREEK RD. & COVE RD.
ROANOKE, VIRGINIA

OWNER/DEVELOPER:
THE REBKEE COMPANY
1020 OLD BON AIR ROAD
RICHMOND, VA 23235
PHONE: (804) 560-0500
FAX: (804) 560-0778

REVISIONS:
1 COUNTY COMMENTS 12/27/05
2 FINAL SUBMITTAL 01/18/06

LAYOUT COORD:	DBE
PLANNING MGR.	KDC
DRAWING BY:	DHL
DATE:	11/15/05
JOB NUMBER:	113001052

TITLE: **UTILITY DETAILS**

SHEET NUMBER: **C9**

COMMENTS: