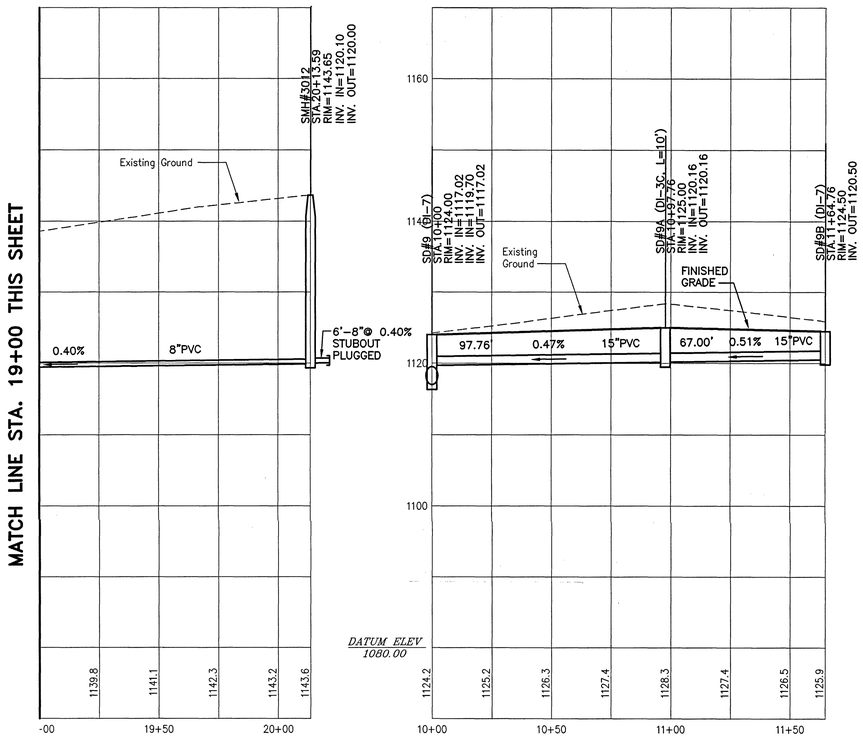

"SSA"

"SDH"

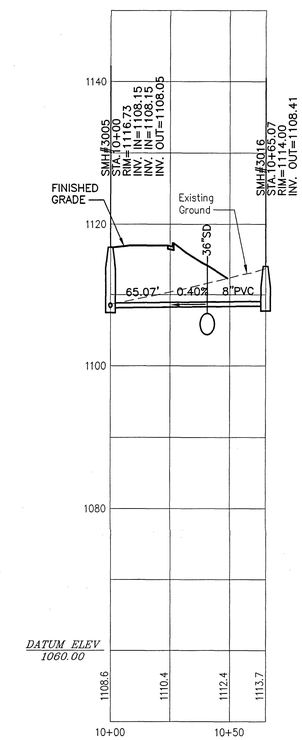

"SSD"

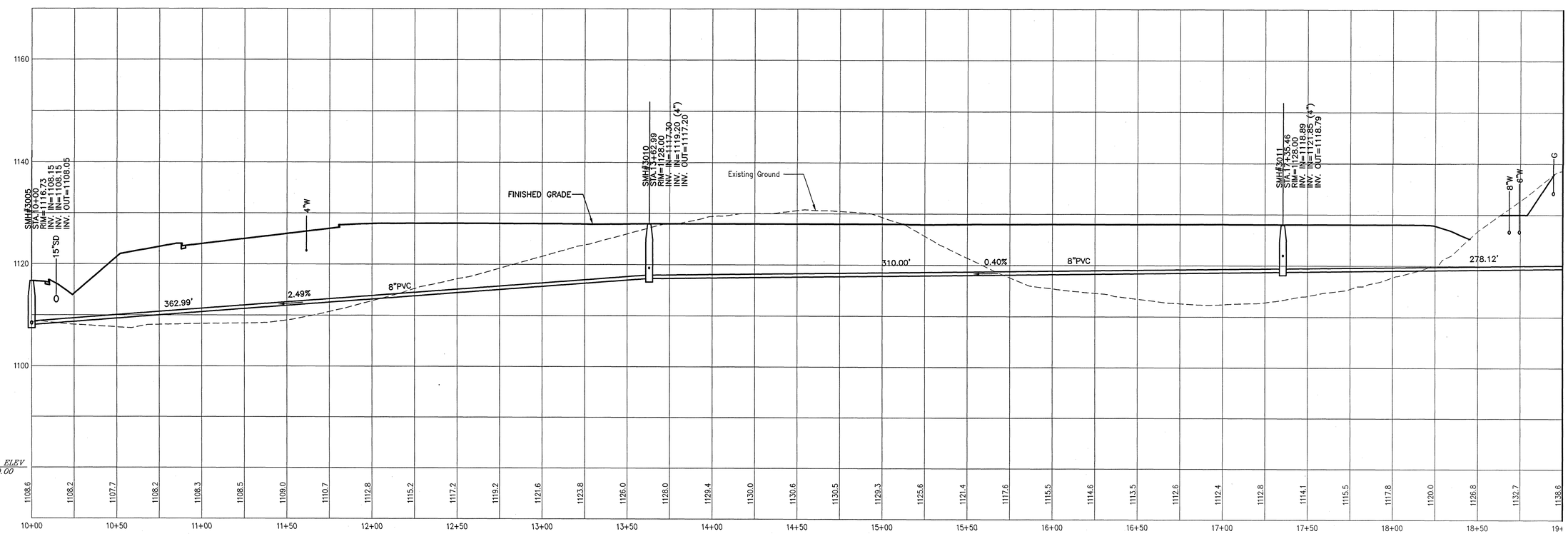

MATCH LINE STA. 19+00 THIS SHEET

"SSA"

COMMONWEALTH OF VIRGINIA
STEWART W. HUBBELL
NO. 07420
PROFESSIONAL ENGINEER

Revisions		Date
1	REVISED UTILITIES FOR BLDG. EXP.	2/24/04

Issue Date: DEC., 2003

Drawn By: ARB
Designed By: HAY
Checked By: SWH
Date: 12/22/03

Mattern & Craig
CONSULTING ENGINEERS • SURVEYORS
701 FIRST STREET, S.W.
ROANOKE, VIRGINIA 24016
(540) 345-9342
FAX (540) 345-7891

CARDINAL INSULATED GLASS
VINTON BUSINESS CENTER

PROFILES– SANITARY SEWER

TOWN OF VINTON, VIRGINIA

Vertical Scale: 1"=10'

Horizontal Scale: 1"= 30'

Commission Number: 2207–A

Sheet No.: 18

R:\DWGS\2207–A\DWG\18.DWG