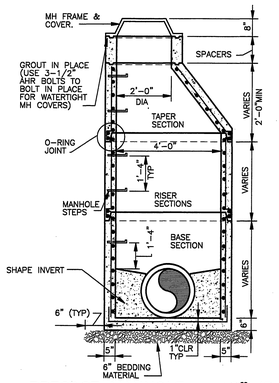

PRECAST MANHOLE – 48" ID
NO SCALE

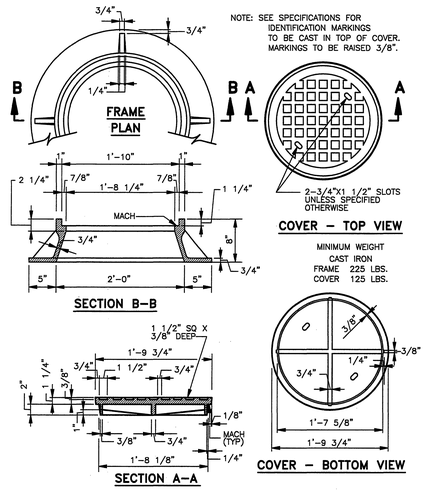

STANDARD MANHOLE FRAME & COVER
NO SCALE

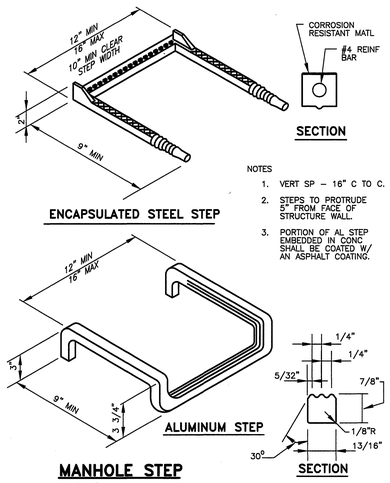

MANHOLE STEP
NO SCALE

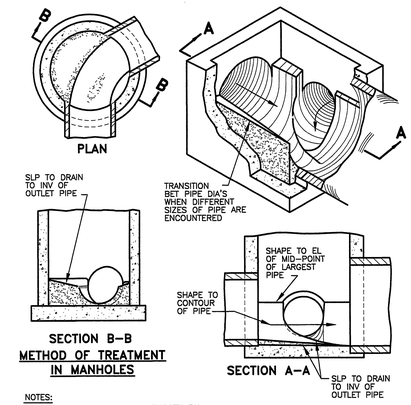

NOTES:
1. SURFACES SHALL BE LEFT SMOOTH BY HAND TROWELING. COARSE AGGR SHALL NOT REMAIN EXPOSED.
2. DET'S OF INV SHAPING AS SHOWN HEREON ARE FOR EXAMPLE PURPOSES ONLY. EA MH OR DI SHALL BE SHAPED INDIVIDUALLY TO FIT THE PARTICULAR INLET AND OUTLET CONFIGURATION AND FLOW LINES.

METHOD OF SHAPING MANHOLE AND INLET INVERTS
NO SCALE

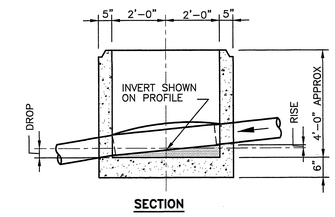

SLOPE	DROP	RISE
5%	.15'	.10'
6%	.15'	.10'
8%	.20'	.15'
10%	.25'	.20'
12%	.30'	.20'
14%	.35'	.25'
16%	.40'	.30'
18%	.45'	.35'
20%	.50'	.40'

NOTE:
FURNISH BASE WITH PIPE OPENINGS LOCATED TO ALLOW VERTICAL OFFSETS OF PIPE INVERTS, AS SHOWN, WHENEVER PIPE SLOPES ARE 5% OR GREATER.

PRECAST BASE UNIT–INSTALLATION
NO SCALE

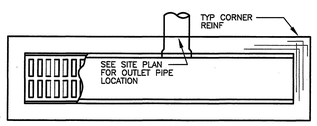

NOTE:
FOR INVERT ELEVATION AT OUTLET PIPE AND DIMENSIONS W AND L, SEE SITE PLANS AND PROFILES.

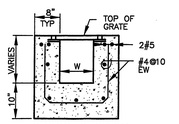

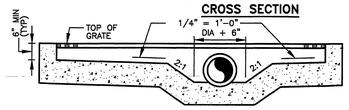

TRENCH DROP INLET
NO SCALE

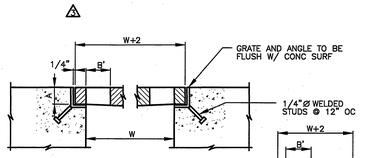

HEAVY DUTY GRATES DIMENSIONS & MINIMUM WEIGHTS				
W (IN.)	A (IN.)	BXB' (IN.)	C (IN.)	WEIGHT LB/FT
24	2	1–1/2X5	1–1/4	104

NOTES:
1. ALL GRATES AND FRAMES SHALL BE HEAVY DUTY
2. GRATE AND FRAME SHALL BE GRAY CAST IRON OR DUCTILE CAST IRON.

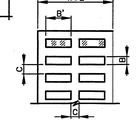

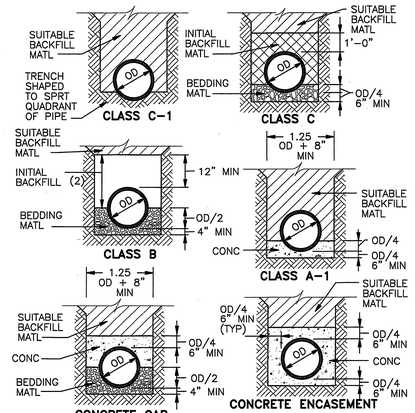

(1) WIDTHS SHOWN ARE MAX TRENCH WIDTH FROM 12" ABOVE TOP OF PIPE TO BOT OF TRENCH. TRENCH WIDTHS SHALL ALSO CONFORM W/ THE MIN WIDTHS INDICATED.

(2) MATERIAL FOR INITIAL BACKFILL SHALL BE AS SPECIFIED.

TRENCH WIDTH

NOMINAL PIPE DIA	TRENCH WIDTH (1)
4" & 6"	2'–0"
8" THRU 12"	2'–8"
15" THRU 21"	PIPE OD + 20"
24" THRU 30"	PIPE OD + 24"
33" THRU 42"	PIPE OD + 30"
48" & LARGER	PIPE OD + 36"

PIPE TRENCH
NO SCALE

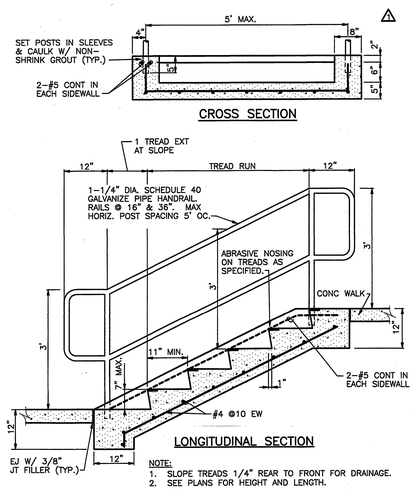

NOTE:
1. SLOPE TREADS 1/4" REAR TO FRONT FOR DRAINAGE.
2. SEE PLANS FOR HEIGHT AND LENGTH.

CONCRETE STAIRS
NO SCALE

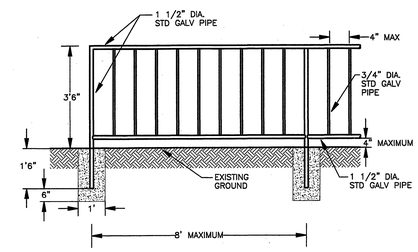

PEDESTRIAN GUARDRAIL
NO SCALE

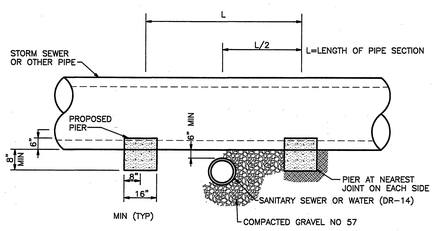

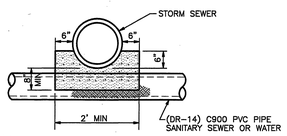

NOTE:
1. PIER REQUIRED WHEN STORM DRAIN OR OTHER PIPES CROSSES OVER THE OTHER UTILITY WITH A VERTICAL CLEARANCE OF LESS THAN 18".
2. PIER TO BE BUILT ON UNDISTURBED EARTH.
3. CONCRETE TO BE READY MIX CLASS A3.

CONCRETE PIERS
NO SCALE

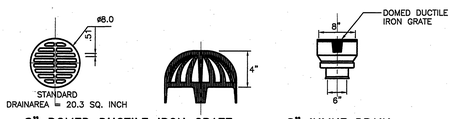

8" DOMED DUCTILE IRON GRATE

8" INLINE DRAIN

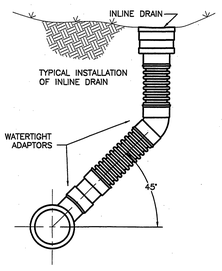

TYPICAL INSTALLATIONS

INLINE DRAINS AND DRAIN BASINS

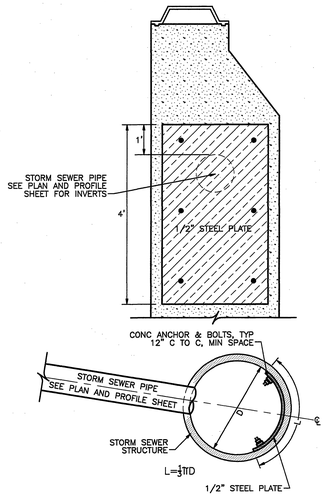

STEEL PLATE REINFORCED MANHOLE STRUCTURE
NO SCALE

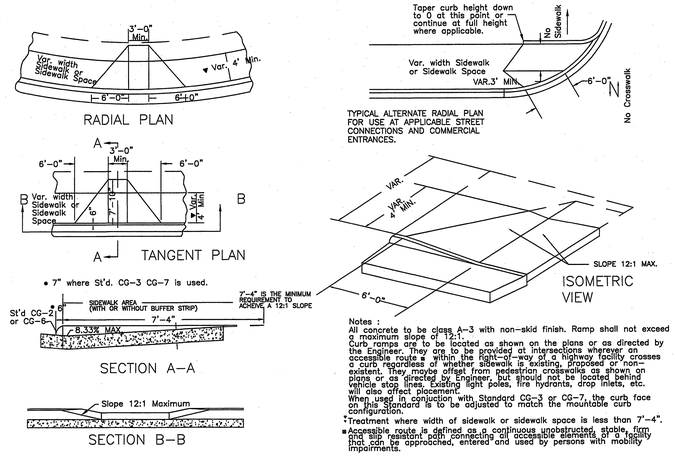

Notes :
All concrete to be class A-3 with non-skid finish. Ramp shall not exceed a maximum slope of 12:1.
Curb ramps are to be located as shown on the plans or as directed by the Engineer. They are to be provided at intersections wherever an accessible route is within the right-of-way of a highway facility crosses a curb regardless of whether sidewalk is existing, proposed or non-existent. They maybe offset from pedestrian crosswalks as shown on plans or as directed by Engineer, but should not be located behind vehicle stop lines. Existing light poles, fire hydrants, drop inlets, etc. will also affect placement.
When used in conjuction with Standard CG-3 or CG-7, the curb face on this Standard is to be adjusted to match the mountable curb configuration.
* Treatment where width of sidewalk or sidewalk space is less than 7'-4".
■ Accessible route is defined as a continuous unobstructed, stable, firm and slip resistant path connecting all accessible elements of a facility that can be approached, entered and used by persons with mobility impairments.

CURB RAMP (PERSONS WITH MOBILITY IMPAIRMENTS)
NO SCALE

SEALS

CONSULTANT

HELLMUTH, OBATA + KASSABAUM, INC.
ARCHITECTS, ENGINEERS, PLANNERS, INTERIOR DESIGNERS, CONSULTANTS
St. Louis, Missouri 63102 USA

CARILION Health System
CMC CONSOLIDATION
CARILION ROANOKE MEMORIAL HOSPITAL
ROANOKE, VIRGINIA

HSMM
ARCHITECTS ENGINEERS PLANNERS
HAYES, SEAY, MATTERN & MATTERN, INC.
ROANOKE, VA 24016
(540) 857-3100 WWW.HSMM.COM

REV	DATE	DESCRIPTION	APP
1	7/9/04	PHASE I AND II SITE PACKAGE SUBMITTAL	BJC
2	12/03/04	PHASE II APPROVAL SUBMITTAL	BJC
3	2/14/05	CITY APPROVED – INCLUDES S#01 –S#15	BJC
4	04/29/05	OWNERS REVISIONS	BJC

COMM NO: 40044A
ISSUE DATE: JUN 04, 2004
DESIGNED BY: MDD
DRAWN BY: MDD
CHECKED BY: MLC
SUBMITTED BY: BJC

©HAYES, SEAY, MATTERN & MATTERN, INC., 2005. ALL RIGHTS RESERVED.

CIVIL

DETAILS

C501