AIR VACUUM VALVE CHART

PIPE SIZE	VALVE SIZE	CONNECTOR	VALVE
30" – 36"	6"	6" FLANGE	6" BALL VALVE
24"	4"	4" FLANGE	4" BALL VALVE
18"	3"	TAPPING SADDLE	BALL VALVE
10" – 16"	2"	TAPPING SADDLE	BALL VALVE
6" – 8"	1"	TAPPING SADDLE	BALL VALVE

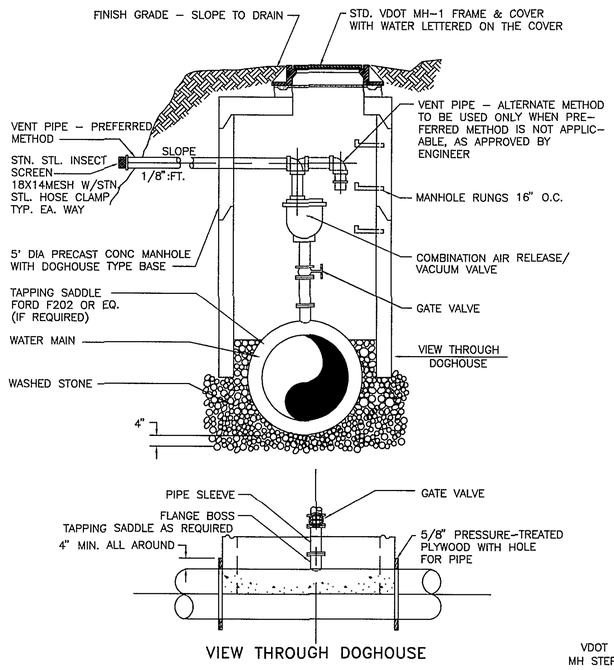

COMBINATION AIR RELEASE/ VACUUM VALVE DETAIL

NTS

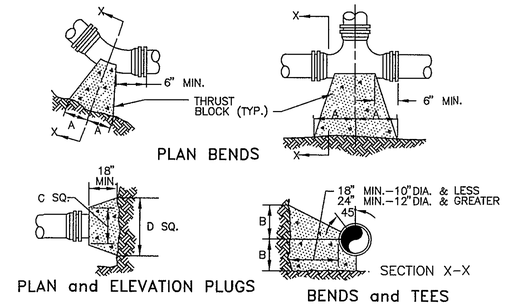

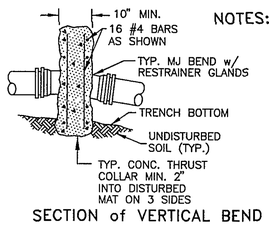

NOTES:
1. FOR VERT. BEND DOWN IN EXCESS OF 1.25', ANCHORAGE SHALL BE RECOMMENDED BY ENGINEER.
2. FOR VERT. BEND UPWARD, BLOCKING TO BE SIMILAR TO THAT FOR HORZ. BEND
3. GLANDS & BOLTS SHALL BE PROTECTED FROM CONC. WHEN POURING THRUST BLOCKS
4. ALL THRUST BLOCK & SUPPORT CONC. SHALL BE CLASS B.
5. THRUST BLOCKS WITH 'B' DIMENSION GREATER THAN 30" SHALL HAVE THE RESTRAINED PIPE INSTALLED WITH A MINIMUM OF 4' OF COVER.

PRESSURE = 200psi
BEARING = 2,000psf
FACTOR OF SAFETY = 1.5

PIPE SIZE	90° BEND		45° BEND		22 1/2° BEND		11 1/4° BEND		TEE		PLUG	
	A	B	A	B	A	B	A	B	A	B	C	D
4"	8"	12"	8"	8"	6"	6"	6"	6"	11"	9"	10"	6"
6"	18"	12"	8"	10"	8"	8"	8"	8"	10"	10"	12"	18"
8"	15"	13"	10"	10"	8"	8"	8"	8"	10"	12"	12"	24"
10"	20"	16"	12"	14"	8"	12"	8"	12"	14"	16"	16"	30"
12"	20"	16"	12"	14"	8"	12"	8"	12"	14"	16"	16"	30"
16"	26"	20"	16"	18"	11"	13"	11"	13"	18"	20"	20"	36"
24"	82"	42"	62"	30"	44"	22"	22"	16"	82"	42"	82"	42"
36"	185"	42"	100"	42"	52"	42"	40"	30"	185"	42"	185"	42"

THRUST BLOCK DETAILS

NTS

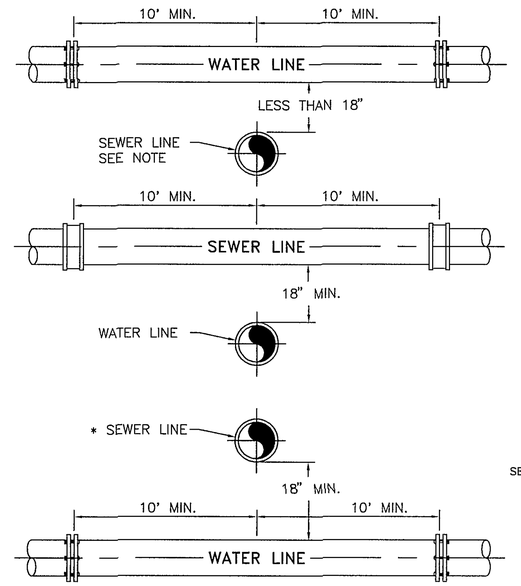

NOTE:
* SEWER LINE ABOVE WATERLINE TO BE CONSTRUCTED OF AWWA WATER LINE MATERIAL & PRESSURE TESTED (SEE SPEC.) AT NO ADDITIONAL COST (SEE SEWER LINE COUPLING DETAIL).

WATER and SEWER CROSSING DETAIL

NTS

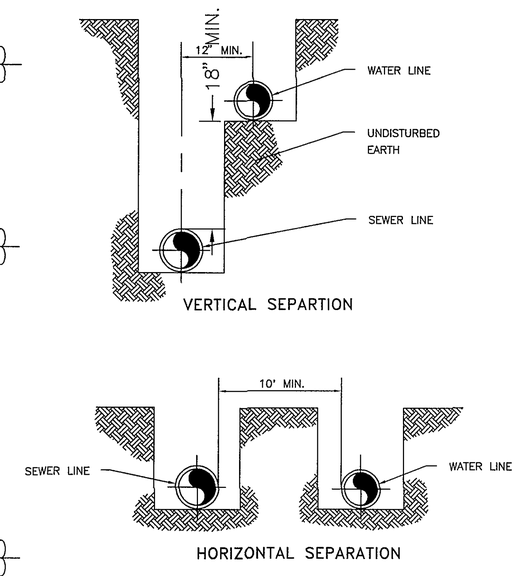

WATER and SEWER SEPARATION DETAIL

NTS

TYPE 1

FLAT BOTTOM TRENCH. LOOSE BACKFILL.

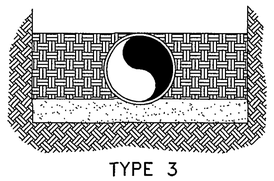

TYPE 3

PIPE BEDDED IN 4 in. MINIMUM OF LOOSE SOIL. BACKFILL LIGHTLY CONSOLIDATED TO TOP OF PIPE.

BEDDING DETAIL

NTS

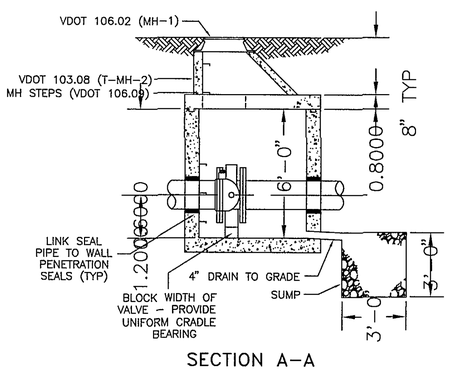

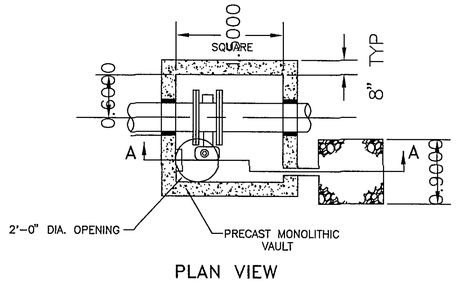

16" BUTTERFLY VALVE VAULT

NTS

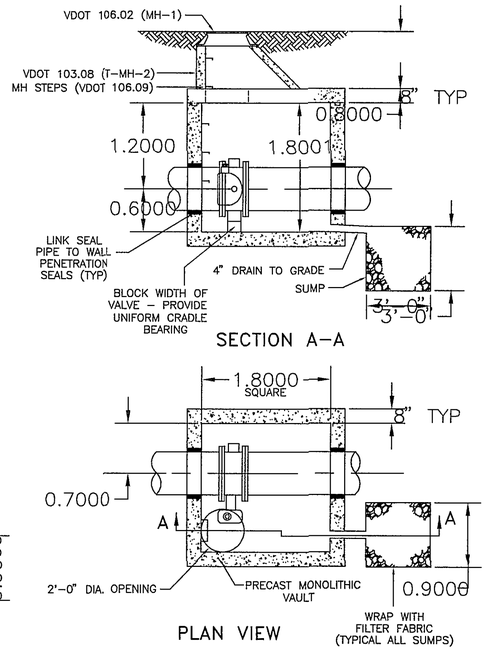

24" BUTTERFLY VALVE VAULT

NTS

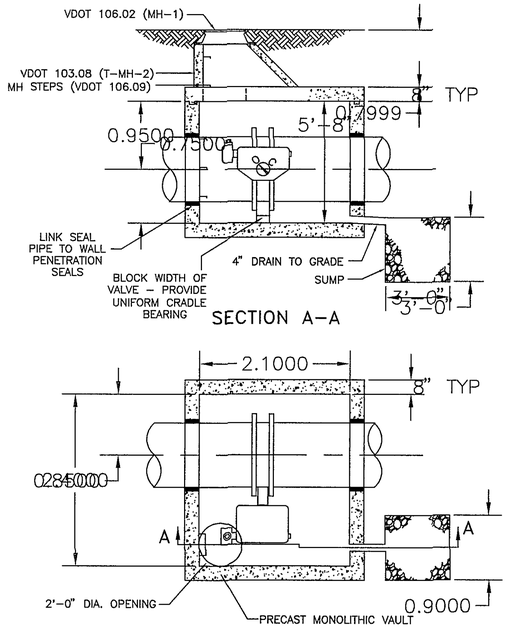

36" BUTTERFLY VALVE VAULT

NTS

AS BUILT

COMMONWEALTH OF VIRGINIA
STEVE E. HIVELY
NO. 9580
PROFESSIONAL ENGINEER

ENGINEER'S SEAL

COMMONWEALTH OF VIRGINIA
RONALD B. SMITH
16774
PROFESSIONAL ENGINEER

ENGINEER'S SEAL

Dewberry & Davis
Architects
Engineers
Planners
Surveyors
5238 Valleypointe Parkway, Suite One-B
Roanoke, Virginia 24019
☎ 703 362-7725

Carvins Cove, Phase II
City of Roanoke
Roanoke, Virginia

CONTRACT "B2"

DETAILS

Drawn By	ACF
Designed By	RBS
Checked By	SEH
Date	APRIL 93
Scale	AS SHOWN
Plan Number	B2DTRWL1
Zoned	NONE
Sheet	20 of 22
File Number	C1160