ELECTRICAL SYMBOLS

- A — CEILING MOUNT OUTLET WITH FLUORESCENT FIXTURE TYPE AS INDICATED.
- B — WALL OUTLET WITH INCANDESCENT FIXTURE.
- 120 VOLT, 3 WIRE, 1Ø, 20 A DUPLEX CONVENIENCE RECEPTACLE, SURFACE MOUNT, WEATHERPROOF, NEMA 5-20R, BROWN COLOR. MOUNT @ 4'-0" AFF.
- LIGHTING SWITCH SINGLE POLE, TOGGLE TYPE, BROWN HANDLE, 20 AMP, SURFACE MOUNT. MOUNT @ 4'-0" AFF.
- ELECTRIC MOTOR, HP, VOLTAGE, AND PHASE AS INDICATED.
- COMBINATION DISCONNECT AUTO-TRANSFORMER REDUCED VOLTAGE MOTOR STARTER WITH OVERLOAD PROTECTION.
- HSP — MANUAL MOTOR STARTER, SURFACE MOUNT WITH RUN PILOT AND OVERLOAD PROTECTION.
- CIRCUIT RUN AND CONNECTION TO DEVICE. HASH MARKS INDICATE NUMBER OF CONDUCTORS EXCEPT GROUNDS. ARROWHEADS INDICATED NUMBER OF CIRCUITS. PANEL DESIGNATION AAS INDICATED. BRANCH CIRCUIT CONDUCTORS ARE #12 AWG COPPER UNLESS OTHERWISE INDICATED.
- T — WALL MOUNTED THERMOSTAT
- CB — CHECK VALVE CONTROL PANEL, PANEL.

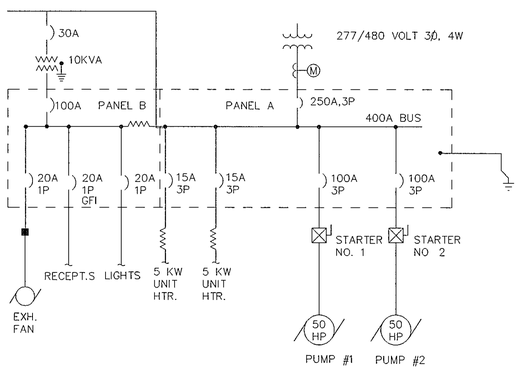

ELECTRICAL ONE-LINE DIAGRAM

NOT TO SCALE

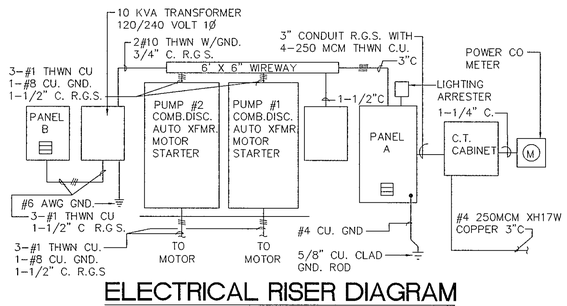

ELECTRICAL RISER DIAGRAM

NOT TO SCALE

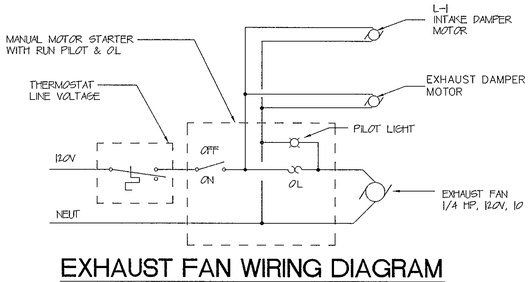

EXHAUST FAN WIRING DIAGRAM

NOT TO SCALE

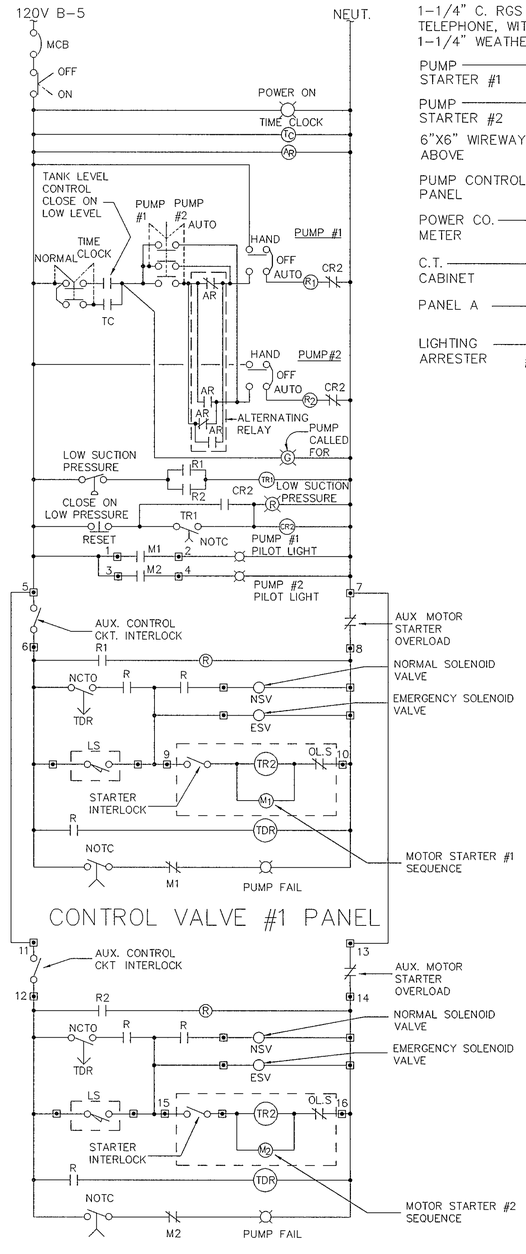

CONTROL VALVE #1 PANEL

CONTROL VALVE #2 PANEL

PUMP CONTROL WIRING DIAGRAM

SCHEMATIC

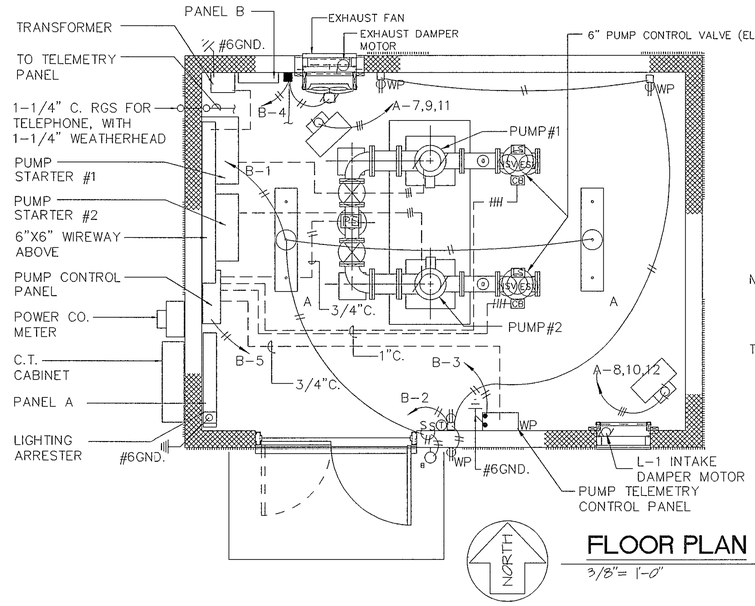

FLOOR PLAN

3/8" = 1'-0"

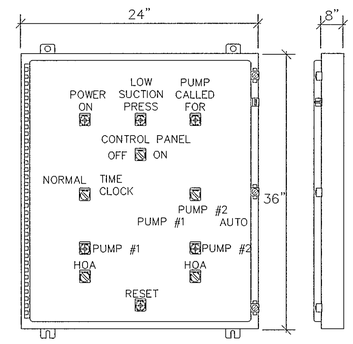

CONTROL CABINET DETAIL

NOT TO SCALE

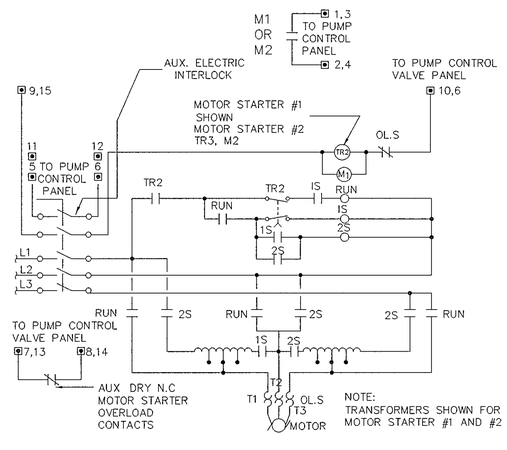

AUTO-TRANSFORMER MOTOR STARTER WIRING DIAGRAM

NOT TO SCALE

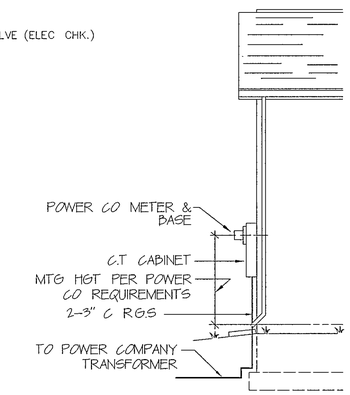

FRONT VIEW ELEVATIONS

1/4" = 1'-0"

AS BUILT

LIGHT FIXTURE SCHEDULE

TYPE A -LITHONIA DL240A, 120 VOLT-40 WATT FLUORESCENT 100 WATT, PENDANT, 1'X4' FLUORESCENT FIXTURE, ACRYLIC PRISMATIC LENS, U.L. LISTED WET LOCATION.

TYPE B -BENJAMINE 11W-150-GX, 120 VOLT, 1 LAMP, 100 WATT, INCANDESCENT, GLASS GLOBE AND GUARD.

ELECTRICAL EQUIPMENT LIST

PANEL A 277/480 VOLT, THREE PHASE, 4 WIRE, 400 AMP RATING, 250 AMP MAIN CIRCUIT BREAKER, 14,000 AMP INTEGRATED SHORT CIRCUIT RATING, NEMA 1 ENCLOSURE, SURFACE MOUNT, 36 INCHES OF MOUNTING SPACE U.L. LISTED AS SERVICE ENTRANCE EQUIPMENT, EQUAL TO SQUARE D I-LINE TYPE HCM, G.E., OR WESTINGHOUSE.

PANEL B - 120/240 VOLT, SINGLE PHASE, 3 WIRE 100 AMP BUS, 100 AMP MAIN CIRCUIT BREAKER 10,000 AIC RATING, NEMA-1 ENCLOSURE, WITH DOOR AND PANEL DOOR DIRECTORY, EQUAL TO SQUARE-D NQOD, BOLT ON CIRCUIT BREAKERS.

STARTERS 480 VOLT, 3PHASE, COMBINATION NON-FUSIBLE DISCONNECT, REDUCED VOLTAGE AUTO-TRANSFORMER MOTOR STARTER, 120 VOLT COIL, NEMA SIZE 3 STARTER, NEMA-1 ENCLOSURE, AUXILLIARY CONTROL CIRCUIT ELECTRIC INTERLOCK AUXILLIARY 1 N.O./N.C. OVERLOAD RELAY CONTACTS, SUITABLE FOR A 50 HP PUMP MOTOR, EQUAL TO SQUARE D CLASS 8606 WESTINGHOUSE OR G.E. (QTY. 2).

UNIT HEATER 5KW 480V, THREE PHASE, 17,060 BTU/HR, 350CFM, HEAVY GAUGE STEEL CABINET, BAKED ENAMEL FINISH, THERMALLY PROTECTED FAN MOTOR, SHEATHED HEATING ELEMENTS, THERMAL SAFETY CUTOUT, PROVIDE W/INTEGRAL THERMOSTAT (ADJUSTABLE) AND WALL MOUNTING HARDWARE, UNIT HEATER SHALL BE BERKO HUH MODINE OR CHROMALOX Q-MARK.

EXHAUST FAN SIDE WALL PROPELLER TYPE 534 CFM,@ .25 INCHES OF WATER STATIC PRESSURE, 1/8 HP FAN MOTOR, 120 VOLT, 860 RPM, 3150 FPM TIP SPEED (MAX.) PROVIDE WITH MOUNTING COLLAR. GREENHECK MODEL SDE-16-24-C, ACME OR COOK.

EXHAUST LOUVER AND INTAKE LOUVER 24"X24" EXTRUDED ALUMINIUM, DRAINABLE COMBINATION TYPE, 6" DEPTH, 3/4" MESH ALUMINIUM BIRD SCREEN, BLADE AND JAMB SEALS, LOUVER QUADRANT W/ELECTRIC OPERATOR. FINISH SELECTED BY ENGINEER. RUSKIN MODEL ELC-6375, CONTRUCTION SPECIALITIES, OR KRUEGER.

THERMOSTAT (FOR EXHAUST FAN) WALL MOUNTED, LINE VOLTAGE TYPE SPDT SWITCH ACTION 30-100 DEG. F RANGE ADJUSTABLE, 16 AMP RATING @ 120 VOLT AC, JOHNSON CONTROLS #A19BAC-1, HONEYWELL OR CHROMALOX (Q-MARK).

MANUAL MOTOR STARTER FRACTIONAL HP TYPE, 1230 VOLT, SINGLE POLE TOGGLE OPERATOR, MELTING ALLOY THERMAL OVERLOAD RELAY, PILOT LIGHT, NEMA-1 ENCLOSURE, SQUARE D MODEL 2510, ALLEN BRADLEY OR CUTLER HAMMER.

TRANSFORMER - 10KVA-480 VOLT PRIMARY, 120\240 VOLT SINGLE PHASE SECONDARY, 115°C TEMPERATURE RISE, WALL MOUNT EQUAL TO SQUARE-D 10S40F CLASS 7410, 2 TAPS AT 5% FCBN.

LIGHTING - 650 VAC PHASE TO GROUND DUTY, FOR 30-4W SYSTEM, EQUAL TO SQUARE-D CLASS 6671-SP3650, G.E. THYRITE SERIES.

WATER DEP'T. #93-25

COMMONWEALTH OF VIRGINIA — STEVE E HIVELY NO. 9580 — PROFESSIONAL ENGINEER

ENGINEER'S SEAL

COMMONWEALTH OF VIRGINIA — RONALD B. SMITH 16774 — PROFESSIONAL ENGINEER

ENGINEER'S SEAL

Dewberry & Davis
Architects Engineers Planners Surveyors
5236 Valleypointe Parkway, Suite One-B
Roanoke, Virginia 24019
☎ 703 362-7725

Carvins Cove, Phase II
City of Roanoke
Roanoke, Virginia

CONTRACT "C2"
MOUNT PLEASANT PUMPING STATION
ELECTRICAL DIAGRAMS
ELECTRICAL DETAILS

Drawn By	REH
Designed By	RBS
Checked By	SEH
Date	MARCH 93
Scale	V: 1" = 5' H: 1" = 50'
Plan Number	MTP-E1
Zoned	NONE
Sheet	E1 of 2
File Number	C1160