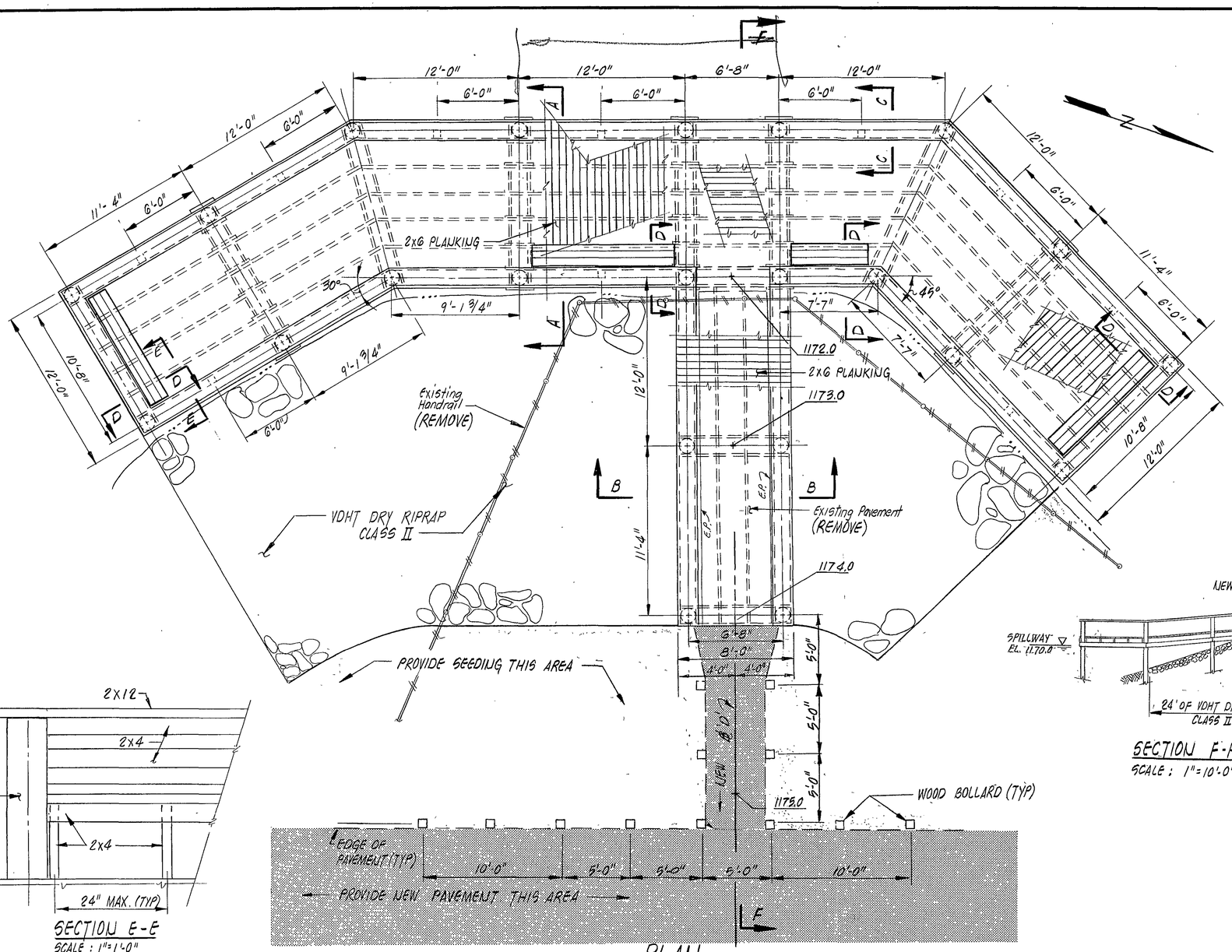

PLAN

SCALE : 1/4" = 1'-0"

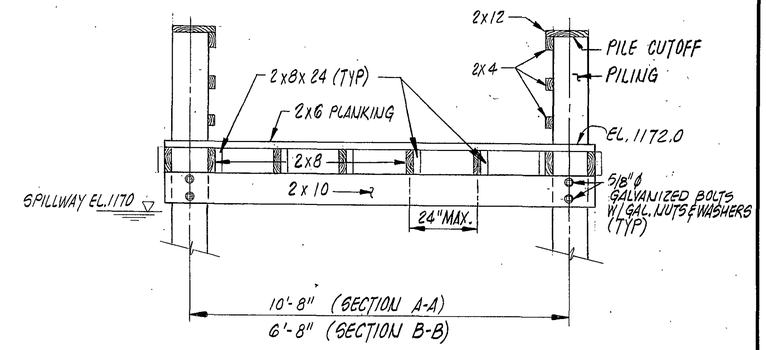

SECTION A-A

SCALE : 1/2" = 1'-0"

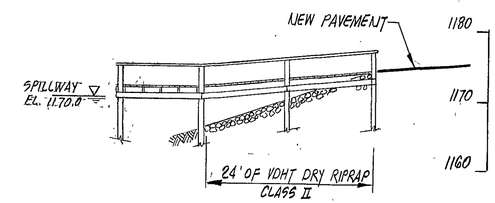

SECTION F-F

SCALE : 1" = 10'-0"

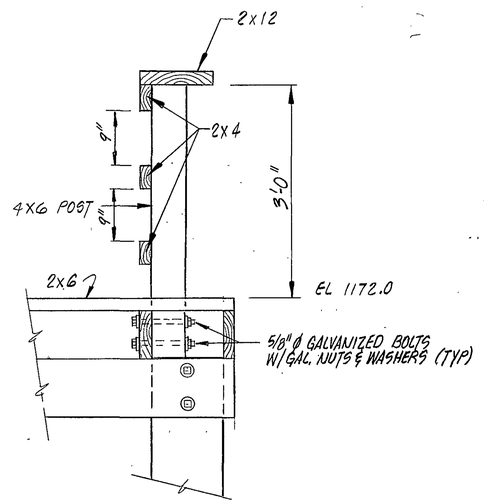

SECTION C-C

SCALE : 1" = 1'-0"

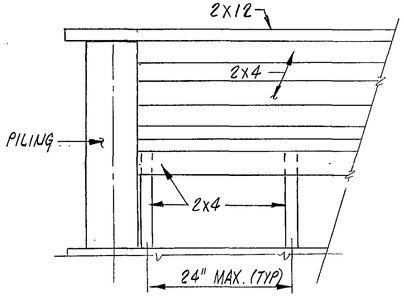

SECTION E-E

SCALE : 1" = 1'-0"

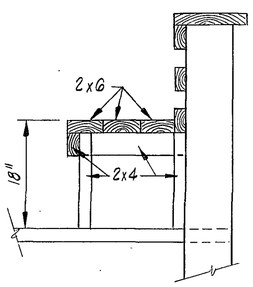

SECTION D-D

SCALE : 1" = 1'-0"

NOTES

1. RE-TIGHTEN ALL BOLTS ONE-YEAR AFTER COMPLETION DATE.
2. ALL NAILS SHALL BE GALVANIZED "RING" NAILS.
3. PILES SHALL BE DRIVEN UNTIL ADEQUATE BEARING CAPACITY IS OBTAINED. (5' MIN. BELOW GRADE UNLESS ROCK IS ENCOUNTERED.) CONTOURS SHOWN BELOW WATER LEVEL ARE APPROXIMATE AND SHALL BE VERIFIED BY CONTRACTOR.
4. ALL PLANKING SHALL BE INSTALLED WITH NO SPACES BETWEEN PLANKS.
5. PILES SHALL BE 8" MIN. DIA., TAPERED SOUTHERN YELLOW PINE, NO. 1 GRADE, MIN. BUTT CIRCUMFERENCE OF 31 INCHES.
6. PILES SHALL BE FURNISHED WITH STEEL OR CAST IRON POINTS OF A SHAPE WHICH WILL ALLOW A SECURE CONNECTION TO THE PILE AND WHICH WILL WITHSTAND DRIVING
7. PILES SHALL RECEIVE CHROMATED COPPER ARSENATE (CCA) TREATMENT CONFORMING TO AMERICAN WOOD PRESERVERS ASSOCIATION (AWPA) STANDARD C3. PILES SHALL BE BRANDED IN ACCORDANCE WITH AWPA STANDARD M6.
8. PILES SHALL BE CUT OFF AT THE PROPER ELEVATION TO SUPPORT THE TOP HANDRAIL OF THE PIER. THE LENGTH OF THE PILE ABOVE THE ELEVATION OF THE CUTOFF SHALL BE SUFFICIENT TO PERMIT THE COMPLETE REMOVAL OF ALL MATERIAL INJURED BY DRIVING.
9. ALL OTHER WOOD PRODUCTS IN THE PIER SHALL BE SOUTHERN YELLOW PINE, NO. 1 GRADE, TREATED WITH CHROMATED COPPER ARSENATE (CCA) CONFORMING TO AWPA STANDARD C2, WITH THE EXCEPTION OF THE WOOD BOLLARDS, WHICH SHALL BE TREATED CONFORMING TO AWPA STANDARD C3.
10. ALL CUTS, BORED HOLES OR SURFACE DAMAGED AREAS OF ALL WOOD SHALL RECEIVE TWO FIELD COATINGS OF CHROMATED COPPER ARSENATE.

REVISION	DATE	DESCRIPTION	BY	APP.

DESIGNED	CARVINS COVE CONCESSION STAND & PIER
DRAWN	
CHECKED	
APPROVED	PIER DETAILS
SUBMITTED	

Mattern & Craig CONSULTING ENGINEERS

SCALE: 1" = 30'	COMM. 480	
DATE:	SHEET 4	