1. ALL METERS ARE TO BE PROVIDED AND INSTALLED BY PARTICIPATING UTILITY AT OWNER/DEVELOPER'S EXPENSE. METER BOX, SERVICE, AND SETTER TO BE FURNISHED AND INSTALLED BY OWNER/DEVELOPER IN ACCORDANCE WITH THE MINIMUM REQUIREMENTS SHOWN BELOW.
2. SADDLES MUST BE USED WITH ALL PLASTIC & DUCTILE IRON PIPE. SERVICE SADDLES SHALL BE USED IN ACCORDANCE WITH WATER DISTRIBUTION PIPING SPECIFICATION. SERVICE SADDLES FOR PLASTIC PIPE SHALL BE: POWERSEAL 3417, OR 3412AS, ROMAC 202S, OR 306; OR FORD METER FS202 OR FS303. FOR DUCTILE IRON PIPE USE THE ABOVE OR POWERSEAL 3413, ROMAC 202 OR FORD METER F202.
3. CORPORATION STOP SHALL BE FORD FB1000-4-G-NL, MUELLER B-25008 OR APPROVED EQUAL.
4. METER BOXES LOCATED IN AREAS SUBJECT TO VEHICULAR TRAFFIC SHALL BE CONCRETE WITH H-20 RATED TRAFFIC BEARING HATCH. ALL OTHER METER BOXES SHALL BE CARSON/MID-STATES PLASTICS, INC. PLASTIC BOX, ADS CORRUGATED HDPE BOX, OR APPROVED EQUAL. MINIMUM METER BOX & LID DIAMETERS SHALL BE IN ACCORDANCE WITH SIZING CHART BELOW.
5. SERVICE SHALL BE "K" TYPE COPPER OR P.E. 4710 ,CTS O.D., MINIMUM CELL CLASS 445474E AND 445474D.
6. COPPER METER SETTER TO BE FORD, A.Y. MCDONALD OR APPROVED EQUAL WITH ANGLE DUAL CHECK VALVE AND BYPASS HAVING LOCKABLE SHUTOFF VALVE.
7. SERVICES REQUIRING METERS LARGER THAN 2-INCH SHALL BE REVIEWED BY THE PARTICIPATING UTILITY ON A CASE BY CASE BASIS.

TRAFFIC BEARING LOCATION

TRAFFIC BEARING VAULT AND H-20 RATED HATCH SHALL BE SIZED IN ACCORDANCE WITH DIMENSIONAL REQUIREMENTS SHOWN BELOW.

NON TRAFFIC BEARING LOCATION

SIZING CHART LID

METER SIZE	BOX DIA. (MIN.)	LID DIA. (MIN.)	COVER & LID MODEL (OR APPROVED EQUAL)
5/8"	18"	11½"	FORD A32-7 OR AY MCDONALD 74M32AT
3/4"- 1"	24"	20"	FORD MC-24-7T OR AY MCDONALD 74M24 T
1 1/2"-2"	30"	20"	FORD MC-30-7 OR AY MCDONALD 74M30 T

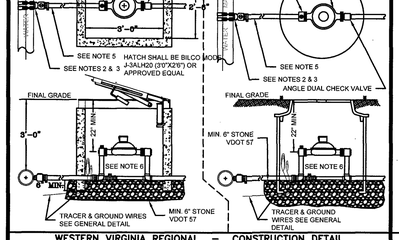

WESTERN VIRGINIA REGIONAL – CONSTRUCTION DETAIL

COMMERCIAL WATER SERVICE METER SIZES 5/8" – 2"
03/01/14 — W-5

1. FILTER FABRIC TO BE INSTALLED BETWEEN BOTTOM OF PIPE AND STONE BEDDING. FABRIC TO EXTEND BOTTOM OF VAULT (FULL CIRCUMFERENCE).

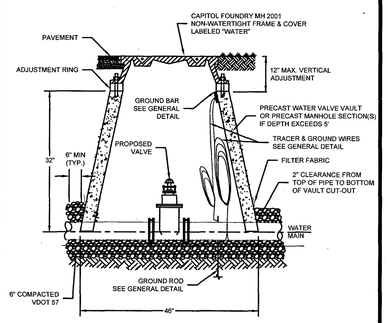

WESTERN VIRGINIA REGIONAL – CONSTRUCTION DETAIL

WATER LINE VALVE & VAULT
01/01/14 — W-9

VERTICAL LOW-SHRINK OUT OF PRECAST NON SHRINK GROUT, SAND, AND 1/2" AND LESS DIAMETER GRAVEL WITH 28 DAYS, STRENGTH AT MINIMUM 3,000 P.S.I.
2. MIX IS TO BE FORCED INTO ALL GROOVES AND UNDER FLANGE OF FRAME AND LEFT AT OR ABOVE TOP OF FLANGE.
3. DO NOT BACKFILL AROUND FRAME AND COVER, FOR 48 HOURS AFTER CONCRETE IS PLACED. THE USE OF HIGH EARLY STRENGTH CEMENT WOULD REDUCE TIME TO (24 HRS.)
4. RESTRICT TRAFFIC LOAD FOR A MINIMUM OF 24 HOURS.

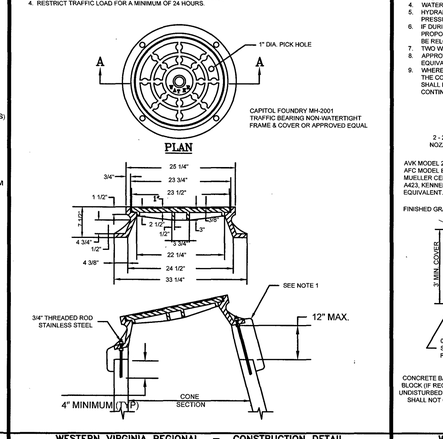

WESTERN VIRGINIA REGIONAL – CONSTRUCTION DETAIL

VAULT FRAME AND COVER
01/01/14 — W-16

1. PUBLIC HYDRANTS SHALL BE PAINTED SILVER WITH AN OIL-BASED PAINT. PRIVATE HYDRANTS SHALL ALSO BE PAINTED SILVER WITH AN OIL-BASED PAINT UNLESS OTHERWISE SPECIFIED BY THE JURISDICTIONAL FIRE MARSHALL.
2. FIRE HYDRANT SHALL BE INSTALLED 2' MIN. AND 4' MAX. FROM BACK OF CURB OR 8' MIN. AND 12' MAX. FROM EDGE OF PAVEMENT WHEN CURB IS NOT PRESENT. FIRE HYDRANT TO BE INSTALLED WITHIN RIGHT-OF-WAY OR EASEMENT LINE.
3. AREA AROUND HYDRANT AT A RADIUS OF 4' TO BE LEVEL AND UNOBSTRUCTED.
4. WATERPROOF BAGS OR OUT OF SERVICE RINGS SHALL BE PLACED OVER ALL NEWLY INSTALLED FIRE HYDRANTS.
5. HYDRANT ASSEMBLIES SHALL BE RODDED AND RESTRAINED WITH APPROVED M.J. GLAND RESTRAINTS. HIGH PRESSURE (OVER 150 PSI) ALSO REQUIRES CONCRETE THRUST BLOCKS AS SHOWN BELOW.
6. IF DURING CONSTRUCTION THE SEASONAL HIGH WATER LEVEL IS NOTED TO BE ABOVE THE DRAIN OUTLETS OF THE PROPOSED HYDRANT, THE PARTICIPATING UTILITY WILL BE NOTIFIED IMMEDIATELY SO THAT THE HYDRANT CAN BE RELOCATED TO A SUITABLE LOCATION. OMITTED, OR THE DRAIN HOLE PLUGGED.
7. TWO WRAPS OF TRACER WIRE SHALL BE WRAPPED AROUND BASE OF HYDRANT.
8. APPROVED MODELS - AVK MODEL 2780, AFC MODEL B-84-B-5, MUELLER CENTURION A423, KENNEDY K81D OR EQUIVALENT.
9. WHERE HYDRANT LATERAL(S) IS APPROVED BY THE PARTICIPATING UTILITY TO BE LONGER IN LENGTH, MAKING THE CONTINUOUS SECTION OF PIPE ON EACH SIDE OF THE GATE VALVE UNFEASIBLE, RESTRAINED PIPE JOINTS SHALL BE INSTALLED BETWEEN THE TEE AND GATE VALVE. IN LIEU OF RODDING, HOWEVER, A RODDED CONTINUOUS SECTION OF PIPE SHALL ALWAYS BE INSTALLED BETWEEN THE GATE VALVE AND HYDRANT.

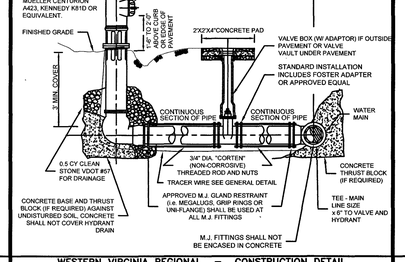

WESTERN VIRGINIA REGIONAL – CONSTRUCTION DETAIL

FIRE HYDRANT ASSEMBLY
07/01/15 — W-17

1. TAPPING SLEEVE SHALL BE POWERSEAL MODEL 3490 TYPE 304 STAINLESS STEEL WITH CARBON STEEL FLANGE. ROMAC'S MODEL SST III, FORD MODEL FTSS WITH CARBON STEEL FLANGE OR APPROVED EQUIVALENT. SLEEVE SHALL BE RATED AT 100 PSI OVER WORKING PRESSURE AND MUST HAVE A TEST PLUG.
2. TAPPING VALVE SHALL BE AVK RESILIENT SEATED GATE VALVE SERIES 25 M.J/FL, MUELLER T-2360 RESILIENT WEDGE TAPPING VALVE WITH MJ/FL, OR AFC SERIES 2500 RESILIENT WEDGE TAPPING VALVE WITH MJ/FL. VALVE SHALL BE RATED AT 250 PSI.
3. TAPPING SLEEVE AND VALVE SHALL BE FULL PORT TO ACCEPT FULL SIZE SHELL CUTTER.
4. STEEL FLANGE SHALL MEET AWWA C207.
5. SIZE-ON-SIZE TAPPING NOT ALLOWED UNLESS APPROVED BY PARTICIPATING UTILITY.

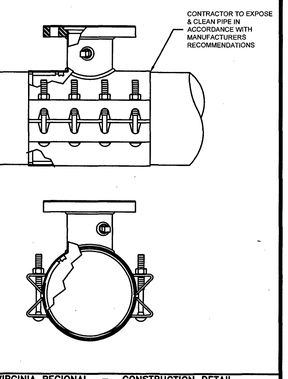

WESTERN VIRGINIA REGIONAL – CONSTRUCTION DETAIL

TAPPING SLEEVE AND VALVE
01/01/14 — W-21

1. MATERIALS AND FABRICATION IN ACCORDANCE WITH ASTM C478-09.
2. WHEN USED AS SAMPLING MANHOLE FLOW SHALL PASS STRAIGHT THROUGH, i.e., 180°.
3. STEPS SHALL BE VERTICALLY ALIGNED. FIRST STEP SHALL BE WITHIN 12" OF COVER, BOTTOM STEP SHALL BE WITHIN 24" OF BOTTOM OF MANHOLE.
4. FRAME AND COVER SHALL BE PROPERLY ALIGNED WITH THE 2 FOOT OPENING OF THE MANHOLE STRUCTURE AND BOLTED IN PLACE.
5. FLAT TOP MANHOLES MAY ONLY BE SUBSTITUTED WITH THE PERMISSION OF THE PARTICIPATING UTILITY.
6. FLEXIBLE JOINT MANHOLE CONNECTION SHALL BE AS MANUFACTURED BY PRES-SEAL GASKET CORPORATION OR EQUAL.
7. GROUT ANNULAR SPACE BETWEEN PIPE AND PRECAST MANHOLE ON INSIDE OF MANHOLE.
8. WHEN REPLACING AN EXISTING MANHOLE OR INSTALLING A NEW PRECAST MANHOLE ON AN EXISTING SEWER, A MINIMUM OF SIX FEET (6') OF EXISTING PIPE SHALL BE REMOVED AND REPLACED WITH NEW MATERIAL ON INLET AND OUTLET OF MANHOLE.
9. MANHOLES WHERE THE INVERT IS LOWER THAN THE NORMAL GROUNDWATER ELEVATION (I.E., ALONG CREEKS, RIVERS, LOW-LYING AREAS, ETC.) SHALL HAVE A FULL EXTERIOR COATING AND JOINT WRAP APPLIED IN ADDITION TO JOINT SEALANT. SEE NOTES 10 & 11.
10. IF REQUIRED EXTERIOR VERTICAL WALL SURFACES SHALL BE FACTORY COATED IN ACCORDANCE WITH THE MANUFACTURERS RECOMMENDATION. COATING SHALL BE HIGH BUILD COAL TAR EPOXY MEETING ASTM D1227. COATING SHALL BE APPLIED IN TWO COATS TO A MINIMUM TOTAL THICKNESS OF 16 MILS.
11. IF REQUIRED ALL MANHOLES SHALL UTILIZE AN EXTERNAL FRAME AND JOINT SEAL AT ALL JOINTS AND AT THE FRAME/CHIMNEY INTERFACE. SEAL SHALL BE MADE OF EPDM RUBBER INACCORDANCE WITH ASTM D412 OR POLYOLEFIN BACKED EXTERIOR JOINT WRAP IN ACCORDANCE WITH ASTM E-1745, C-877, AND C-990. EDM SEAL SHALL HAVE A MINIMUM THICKNESS OF 60 MILS. POLYOLEFIN BACKED EXTEROR JOINT WRAP SHALL HAVE A BACKING BAND ELEMENT WITH MINIMUM THICKNESS OF 4 MILS. AND BUTYL ROLLER ADHESIVE WITH MINIMUM THICKNESS OF 60 MILS. SEAL SHALL AGGRESSIVELY BOND TO CONCRETE AND METAL STRUCTURES.
12. FOR PIPE LARGER THAN 15 INCHES IN DIAMETER, THE MINIMUM INSIDE DIAMETER OF THE MANHOLE SHALL BE IN ACCORDANCE WITH MANUFACTURERS RECOMMENDATIONS BASED ON PIPE SIZE AND ANGLE BETWEEN INLET AND OUTLET PIPING.
13. 6" MINIMUM DIAMETER MANHOLE SHALL BE REQUIRED WHEN DEPTHS EXCEED 15' UNLESS OTHERWISE APPROVED BY PARTICIPATING UTILITY.

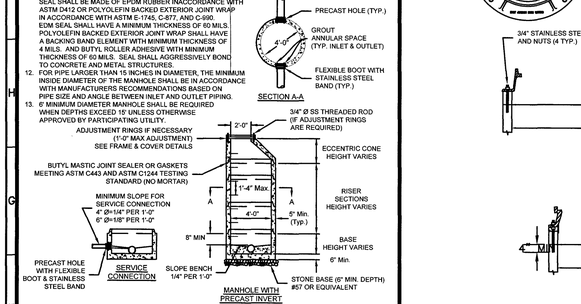

WESTERN VIRGINIA REGIONAL – CONSTRUCTION DETAIL

4' STANDARD MANHOLE FOR PIPE 15" OR SMALLER (FOR DEPTHS UP TO 15 FEET)
08/01/15 — S-1

1. WATERTIGHT MANHOLE FRAME MODEL #1045Z BY EAST JORDAN IRON WORKS, INC. OR EQUIVALENT.
2. HDPE ADJUSTMENT RINGS SHALL MEET H-20 LOAD RATING, AND SHALL BE INTERLOCKING OR UTILIZE BUTYL MASTIC JOINT SEALANT BETWEEN EACH RING TO FORM A WATERTIGHT JOINT.
3. CONCRETE ADJUSTMENT RINGS SHALL MEET H-20 LOAD RATING AND UTILIZE BUTYL MASTIC JOINT SEALANT BETWEEN EACH RING AND FRAME AN COVER TO FORM A WATERTIGHT JOINT.
4. FRAME HEIGHT SHALL BE 7" FOR BURIED LOCATIONS AND 4" FOR EXPOSED LOCATIONS.

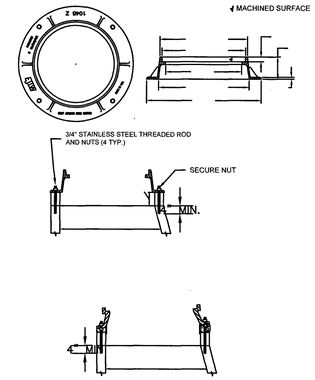

WESTERN VIRGINIA REGIONAL – CONSTRUCTION DETAIL

WATERTIGHT MANHOLE FRAME
01/01/14 — S-4

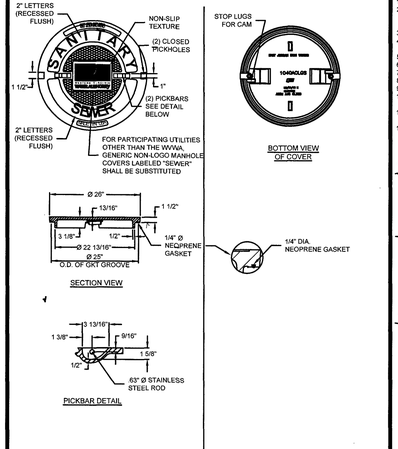

STANDARD MANHOLE COVER — BOLT-DOWN MANHOLE COVER

WESTERN VIRGINIA REGIONAL – CONSTRUCTION DETAIL

WATERTIGHT MANHOLE COVER
01/01/14 — S-5

1. TRAFFIC BEARING BOX AND LID REQUIRED IN TRAFFIC AREAS (CAPITOL FOUNDRY VB-9"S).
2. SEWER LATERAL AND CLEANOUT PIPING SHALL BE ASTM D3034 SDR 26. SEWER LATERAL FITTINGS SHALL BE OF SAME SDR RATING AS THE SEWER MAIN. SCHEDULE 40 SOLVENT WELD PIPE AND FITTINGS MAY BE USED FOR THE SEWER LATERAL AND CLEANOUT ASSEMBLY WITH APPROVAL FROM THE PARTICIPATING UTILITY.
3. ALL PIPE SHALL BE OF SAME SIZE.
4. NO BENDS ARE ALLOWED IN THE LATERAL FROM THE MAIN TO THE CLEANOUT STACK WYE. (EXCEPT FOR DEEP SEWER, AS SHOWN BELOW).
5. ALL MAIN LINE TAPS ON ACTIVE MAINS SHALL BE PERFORMED BY PARTICIPATING UTILITY.
6. PIPING ON PRIVATE SIDE OF CLEANOUT TO BE INSTALLED PER GOVERNING JURISDICTION REQUIREMENTS.
7. MINIMUM LATERAL SIZE: 4" FOR RESIDENTIAL SERVICE, 6" FOR NON-RESIDENTIAL SERVICE.
8. SEWER CLEANOUTS SHALL BE SAME SIZE AS SEWER LATERAL.
9. MINIMUM COVER FOR ALL SEWER LATERALS SHALL BE THREE (3) FEET.
10. PROPERTY OWNER RESPONSIBLE FOR INSTALLING CLEANOUT ON PROPERTY LINE (IN ACCORDANCE WITH THIS DETAIL) WHEN MAINTENANCE OCCURS.
11. LOWEST SERVED FINISHED FLOOR ELEVATION SHALL BE A MINIMUM OF THREE FEET (3') ABOVE THE TOP OF THE MAIN AT THE POINT WHERE THE SERVICE LATERAL CONNECTS TO THE MAIN.
12. WHEN CONNECTING TO EXISTING LATERAL USE FERNCO FLEXIBLE COUPLING.

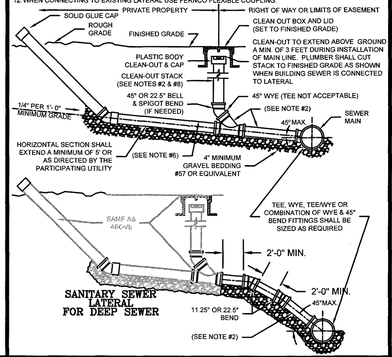

WESTERN VIRGINIA REGIONAL – CONSTRUCTION DETAIL

SANITARY SEWER LATERAL
01/01/14 — S-6

1. ALL CONNECTIONS BETWEEN FORCE MAIN AND BALL VALVE SHALL BE FUSED HDPE.
2. USE ELECTRO FUSION TEE TO CONNECT TO HDPE FORCE MAIN.
3. USE APPROPRIATELY SIZED TAPPING SADDLE TO CONNECT TO PVC OR DUCTILE IRON FORCE MAIN.
4. PLASTIC VALVES AND FITTINGS MAY BE USED IN LIEU OF THE BRASS VALVES AND FITTINGS SHOWN ON THE DETAIL.

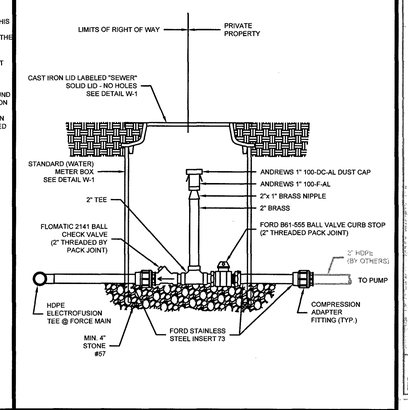

WESTERN VIRGINIA REGIONAL – CONSTRUCTION DETAIL

PRESSURE LATERAL ASSEMBLY
01/01/14 — S-10

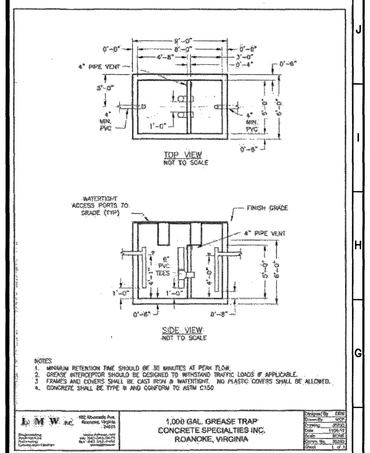

NOTES:
1. MINIMUM RETENTION TIME SHOULD BE 30 MINUTES AT PEAK FLOW.
2. GREASE INTERCEPTOR SHOULD BE DESIGNED TO WITHSTAND TRAFFIC LOADS IF APPLICABLE.
3. FRAMES AND COVERS SHALL BE CAST IRON & WATERTIGHT. NO PLASTIC COVERS SHALL BE ALLOWED.
4. CONCRETE SHALL BE TYPE 'B' AND CONFORM TO ASTM C150

L M W INC. — 1,000 GAL. GREASE TRAP CONCRETE SPECIALTIES INC. ROANOKE, VIRGINIA

1. BEDDING, HAUNCHING AND INITIAL BACKFILL CONSTRUCTION SHALL BE IN ACCORDANCE WITH THIS DETAIL AND MANUFACTURER'S RECOMMENDATION.
2. ALL PVC PIPE SHALL BE BEDDED IN COMPACTED VDOT #57 OR #68 STONE, OR CRUSHER RUN.
3. IN AREAS SUBJECTED TO VEHICULAR TRAFFIC, BEDDING STONE AND FILL SHALL BE PLACED IN 6" LIFTS FROM BOTTOM OF TRENCH TO 1' ABOVE THE PIPE AND THE REMAINING SHALL BE PLACED IN 10" LIFTS AND SHALL BE COMPACTED TO AT LEAST 90% OF MAXIMUM DENSITY AS DETERMINED BY ASTM D 698.
4. BEDDING REQUIREMENTS FOR DUCTILE IRON WATER LINE ARE DEPENDENT ON MANUFACTURER'S BEDDING CRITERIA.
5. ALL EXCAVATIONS SHALL COMPLY WITH OSHA TECHNICAL MANUAL, CHAPTER 2, TITLED "EXCAVATIONS: HAZARD RECOGNITION IN TRENCHING AND SHORING."
6. THE TRACER WIRE SHALL BE PLACED ALONG THE LOWER QUADRANT OF THE PIPE. THE WIRE SHALL NOT TOUCH THE PIPE, BUT SHALL BE A MAXIMUM OF 6" FROM THE PIPE. NON-METALLIC SPACERS MAY BE USED TO MAINTAIN A SET DISTANCE FROM THE UTILITY.

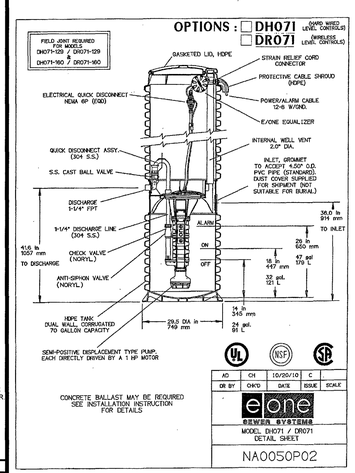

AD	CH	10/20/10	C
DR BY	CHK'D	DATE	ISSUE	SCALE

e/one SEWER SYSTEMS — MODEL DH071 / DR071 DETAIL SHEET — NA0050P02

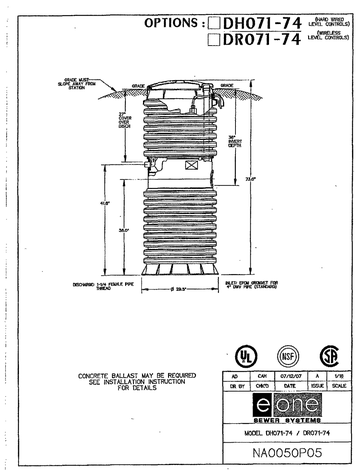

AD	CAH	07/03/07	A	5/16
DR BY	CHK'D	DATE	ISSUE	SCALE

e/one SEWER SYSTEMS — MODEL DH071-74 / DR071-74 — NA0050P05

SIMPLEX SENTRY

REDUNDANT RUN (HIGH LEVEL)
EXTERNAL VISUAL & AUDIBLE ALARM
EXTERNAL LATCHING MANUAL SILENCE
MANUAL RUN
PUMP RUN INDICATOR
CONFORMAL COATED CIRCUIT BOARD
PADLOCK
NEMA 4X ENCLOSURE ASSEMBLY
CORROSION PROOF THERMOPLASTIC POLYESTER APPROVED BY UL 508, ELECTRICAL CONTROL ENCLOSURE

OPTIONS:
☐ ALARM CONTACTS
☐ HOUR METER

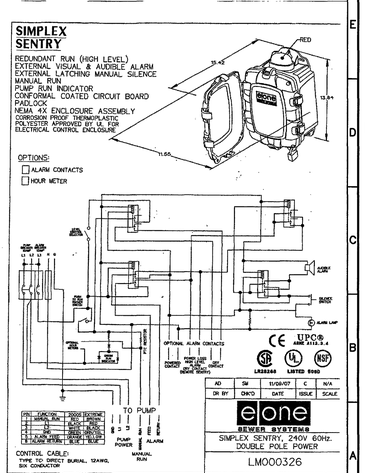

AD	CM	11/08/07	C	N/A
DR BY	CHK'D	DATE	ISSUE	SCALE

e/one SEWER SYSTEMS — SIMPLEX SENTRY, 240V 60Hz. DOUBLE POLE POWER — LM000326

1. TRACER WIRES SHALL BE INSTALLED USING MANHOLES, TRACER WIRE ACCESS BOXES, VALVE BOXES OR VAULTS, WATER METERS AND FIRE HYDRANTS AS ACCESS POINTS.
2. FOR WATER AND SEWER INSTALLED BY OPEN TRENCHING, HORIZONTAL DIRECTIONAL DRILLING, OR PIPE BURSTING, TRACER WIRE SHALL BE NEPTCO TRACE-SAFE WATER BLOCKING TRACER WIRE OR APPROVED EQUAL.
3. SPLICES SHALL ONLY BE MADE WITH GEL FILLED CONNECTORS DESIGNED FOR WIRE WITH A WOVEN POLYESTER FIBER CORE SUCH AS NEPTCO TRACE-SAFE WATER BLOCKING CONNECTORS OR APPROVED EQUAL. SPLICES SHALL BE MADE IN ACCORDANCE WITH THE MANUFACTURER'S INSTALLATION INSTRUCTIONS. CONTRACTOR WILL BE RESPONSIBLE FOR ENSURING CONTINUITY AT ALL SPLICE LOCATIONS.
4. WHERE HDPE PIPE IS INSTALLED WITHOUT STEEL CASING PIPE, SUCH AS A DIRECTIONALLY DRILLED CROSSINGS, AND CONNECTED TO DUCTILE IRON PIPE ON EACH END, TRACER WIRE SHALL BE INSTALLED ALONG FULL LENGTH OF HDPE PIPE WITH AN ACCESS POINT INSTALLED AT EACH HDPE/DUCTILE IRON TRANSITION. TRACER WIRE SHALL BE CONNECTED TO THE ACCESS POINT IN ACCORDANCE WITH THIS DETAIL. ANY TRANSITION FROM DUCTILE IRON MAIN TO NON-DUCTILE IRON MAIN SHALL HAVE AN ACCESS POINT TO BEGIN TRACER WIRE.
5. AS-BUILTS SHALL SHOW TRACER WIRE(S) LOCATION AND ACCESS POINT(S), ALONG WITH BUTT SPLICE LOCATIONS.
6. THE TRACER WIRE SHALL BE PLACED ALONG THE LOWER QUADRANT OF THE PIPE. THE WIRE SHALL NOT TOUCH THE PIPE, BUT SHALL BE A MAXIMUM OF 6" FROM THE PIPE. NON-METALLIC SPACERS MAY BE USED TO MAINTAIN A SET DISTANCE FROM THE UTILITY.
7. WIRE SHALL BE BROUGHT TO THE SURFACE EVERY **FIVE-HUNDRED (500) FEET** AND PLACED IN A WATER METER BOX OR A DRAINAGE & WATER SOLUTIONS, INC. (OR APPROVED EQUAL) ALL CAST IRON TRACER WIRE ACCESS BOX.
8. THE TRACER WILL BE TESTED BY THE PARTICIPATING UTILITY AS PART OF THE PROJECT'S FINAL ACCEPTANCE. CONTRACTOR WILL BE RESPONSIBLE FOR ENSURING ALL CONTINUITY OF TRACER WIRE.
9. THE GROUND WIRE SHALL BE #6 AWG COPPER WIRE AND SHALL BE OF ADEQUATE LENGTH TO EXTEND A MINIMUM OF (5) FIVE FEET BEYOND THE TOP OF THE STRUCTURE. THE END OF THE GROUND WIRED SHALL CONNECT TO THE GROUND BAR OR LUG TERMINAL. GROUND WIRES ALSO SHALL HAVE A BLUE MECHANICAL TERMINAL LUG.
10. GROUND RODS SHALL BE INSTALLED AT EACH LOCATION WHERE GROUND WIRE SURFACES AND CONNECTS TO GROUND BAR. GROUND ROD SHALL BE COPPER COATED WITH A MINIMUM DIAMETER OF 5/8" AND SHALL BE BURIED A MINIMUM OF FOUR (4) FEET INTO THE GROUND.
11. THE GROUND BAR SHALL BE STAINLESS STEEL AND SHALL BE ATTACHED USING SS-¼" X-¾" SS HEX TAPCON. THE FOLLOWING SHALL BE INSTALLED IN (4) FOUR CENTER HOLES: 10-32SS NUTS, #10 SS WASHERS AND 10-32 X-½ SS PHILLIPS. THE FOURTH HOLE SHALL HAVE A BURNDY KA6U MECHANICAL TERMINAL LUG FOR THE #6 AWG GROUND WIRE. THE ASSEMBLY CAN BE ACQUIRED AT RCS INDUSTRIAL SUPPLY, INC. (540-