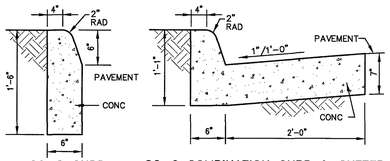

CG-2 CURB CG-6 COMBINATION CURB & GUTTER

10 / C102 C502 **CURBING**
NO SCALE

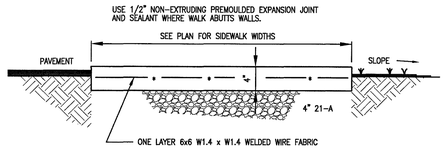

TYPICAL SECTION

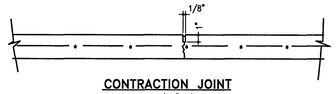

CONTRACTION JOINT
SPACED @ 6'-0" C/C

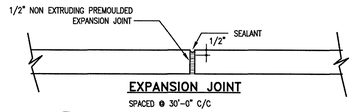

EXPANSION JOINT
SPACED @ 30'-0" C/C

11 / C102 C502 **CONCRETE SIDEWALK DETAILS**
NOT TO SCALE

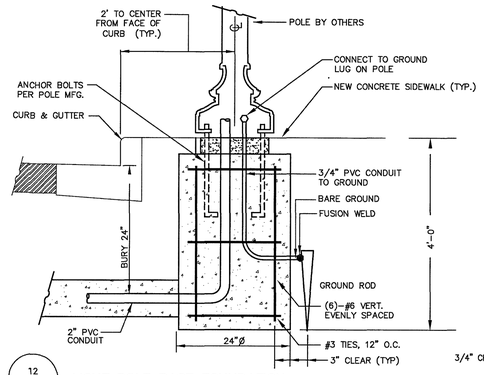

12 / C102 C502 **LIGHT POLE BASE FOUNDATION**
NO SCALE

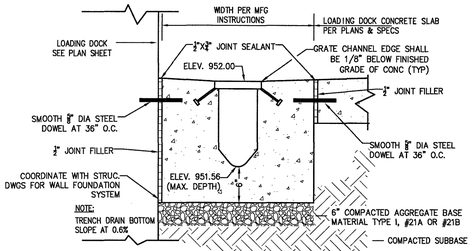

13 / C103 C502 **TRENCH DRAIN DETAIL – LOADING DOCK**
NO SCALE

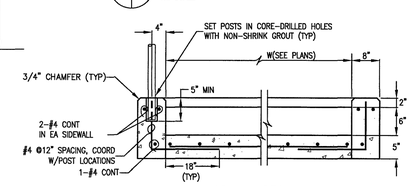

CROSS SECTION

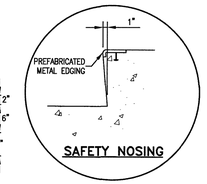

SAFETY NOSING

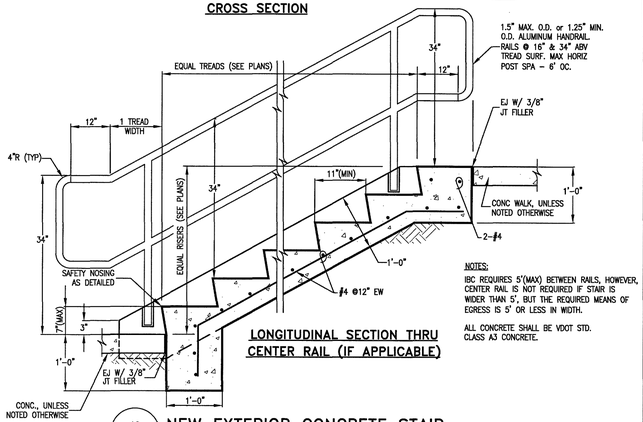

LONGITUDINAL SECTION THRU CENTER RAIL (IF APPLICABLE)

NOTES:
IBC REQUIRES 5'(MAX) BETWEEN RAILS, HOWEVER, CENTER RAIL IS NOT REQUIRED IF STAIR IS WIDER THAN 5', BUT THE REQUIRED MEANS OF EGRESS IS 5' OR LESS IN WIDTH.

ALL CONCRETE SHALL BE VDOT STD. CLASS A3 CONCRETE.

16 / C102 C502 **NEW EXTERIOR CONCRETE STAIR**
NO SCALE

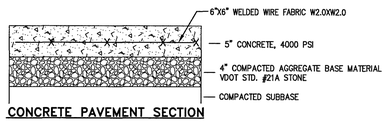

CONCRETE PAVEMENT SECTION

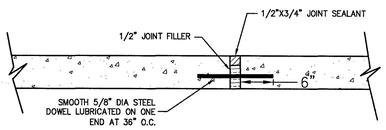

EXPANSION JOINT

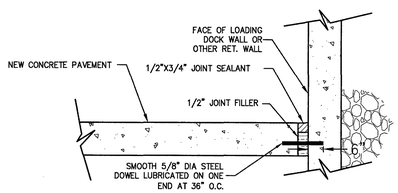

PAVEMENT TO LOADING DOCK/RETAINING WALL DETAIL

14 / C102 C502 **LOADING DOCK CONCRETE SLAB DETAILS**
NOT TO SCALE

1. TAPPING SLEEVE SHALL BE POWERSEAL MODEL 3490 TYPE 304 STAINLESS STEEL WITH CARBON STEEL FLANGE, ROMAC'S MODEL SST III, FORD MODEL FTSS WITH CARBON STEEL FLANGE OR APPROVED EQUIVALENT. SLEEVE SHALL BE RATED AT 100 PSI OVER WORKING PRESSURE AND MUST HAVE A TEST PLUG.
2. TAPPING VALVE SHALL BE AVK RESILIENT SEATED GATE VALVE SERIES 25 MJFL, MUELLER T-2360 RESILIENT WEDGE TAPPING VALVE WITH MJFL, OR AFC SERIES 2500 RESILIENT WEDGE TAPPING VALVE WITH MJFL. VALVE SHALL BE RATED AT 250 PSI.
3. TAPPING SLEEVE AND VALVE SHALL BE FULL PORT TO ACCEPT FULL SIZE SHELL CUTTER.
4. STEEL FLANGE SHALL MEET AWWA C207.
5. SIZE-ON-SIZE TAPPING NOT ALLOWED UNLESS APPROVED BY PARTICIPATING UTILITY.

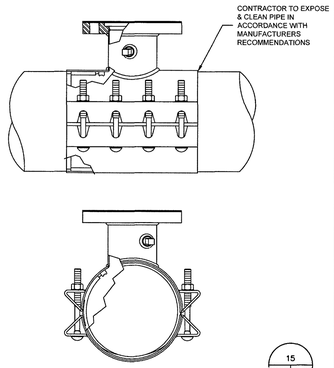

15 / C102 C502

WESTERN VIRGINIA REGIONAL - CONSTRUCTION DETAIL

TAPPING SLEEVE AND VALVE — 01/01/14 — W-21

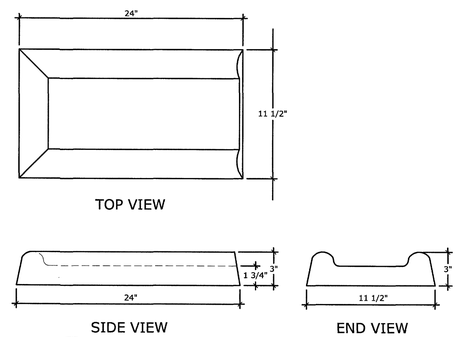

15A / C103 C502 **CONCRETE SPLASH BLOCK**
NO SCALE

CONSTRUCTION OF A SILT FENCE (WITHOUT WIRE SUPPORT)

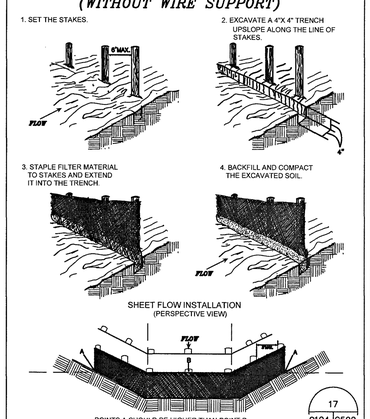

17 / C104 C502

SOURCE: Adapted from Installation of Straw and Fabric Filter Barriers for Sediment Control VA. DSWC Sherwood and Wyant — PLATE 3.05-2

GRAVEL CURB INLET SEDIMENT FILTER

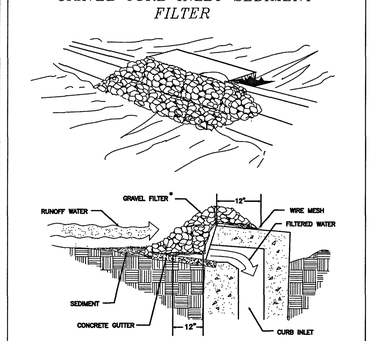

SPECIFIC APPLICATION

THIS METHOD OF INLET PROTECTION IS APPLICABLE AT CURB INLETS WHERE PONDING IN FRONT OF THE STRUCTURE IS NOT LIKELY TO CAUSE INCONVENIENCE OR DAMAGE TO ADJACENT STRUCTURES AND UNPROTECTED AREAS.

* GRAVEL SHALL BE VDOT #3, #357 OR 5 COARSE AGGREGATE.

18 / C104 C502

SOURCE: VA. DSWC — PLATE 3.07-6

SILT FENCE DROP INLET PROTECTION

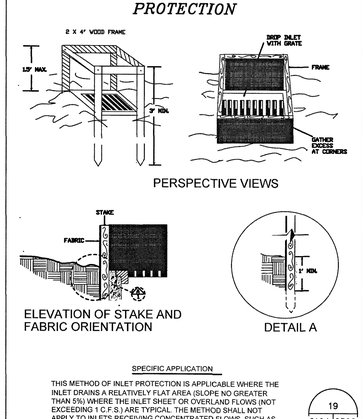

SPECIFIC APPLICATION

THIS METHOD OF INLET PROTECTION IS APPLICABLE WHERE THE INLET DRAINS A RELATIVELY FLAT AREA (SLOPE NO GREATER THAN 5%) WHERE THE INLET SHEET OR OVERLAND FLOWS (NOT EXCEEDING 1 C.F.S.) ARE TYPICAL. THE METHOD SHALL NOT APPLY TO INLETS RECEIVING CONCENTRATED FLOWS, SUCH AS IN STREET OR HIGHWAY MEDIANS.

19 / C104 C502

SOURCE: N.C. Erosion and Sediment Control Planning and Design Manual, 1988 — PLATE 3.07-1

1. PUBLIC HYDRANTS SHALL BE PAINTED SILVER WITH AN OIL-BASED PAINT. PRIVATE HYDRANTS SHALL ALSO BE PAINTED SILVER WITH AN OIL-BASED PAINT UNLESS OTHERWISE SPECIFIED BY THE JURISDICTIONAL FIRE MARSHALL.
2. FIRE HYDRANT SHALL BE INSTALLED 2' MIN. AND 4' MAX. FROM BACK OF CURB OR 6' MIN. AND 12' MAX. FROM EDGE OF PAVEMENT WHEN CURB IS NOT PRESENT. FIRE HYDRANT TO BE INSTALLED WITHIN RIGHT-OF-WAY OR EASEMENT LINE.
3. AREA AROUND HYDRANT AT A RADIUS OF 4' TO BE LEVEL AND UNOBSTRUCTED.
4. WATERPROOF BAGS OR OUT OF SERVICE RINGS SHALL BE PLACED OVER ALL NEWLY INSTALLED FIRE HYDRANTS
5. HYDRANT ASSEMBLIES SHALL BE RODDED AND RESTRAINED WITH APPROVED M.J. GLAND RESTRAINTS. HIGH PRESSURE (OVER 150 PSI) ALSO REQUIRES CONCRETE THRUST BLOCKS AS SHOWN BELOW.
6. IF DURING CONSTRUCTION THE SEASONAL WATER LEVEL IS NOTED TO BE ABOVE THE DRAIN OUTLETS OF THE PROPOSED HYDRANT. THE PARTICIPATING UTILITY WILL BE NOTIFIED IMMEDIATELY SO THAT THE HYDRANT CAN BE RELOCATED TO A SUITABLE LOCATION, OMITTED, OR THE DRAIN HOLE PLUGGED.
7. TWO WRAPS OF TRACER WIRE SHALL BE WRAPPED AROUND BASE OF HYDRANT.
8. APPROVED MODELS - AVK MODEL 2780, AFC MODEL B-84-B-5, MUELLER CENTURION A423, KENNEDY K81D OR EQUIVALENT.
9. WHERE HYDRANT LATERAL(S) IS APPROVED BY THE PARTICIPATING UTILITY TO BE LONGER IN LENGTH, MAKING THE CONTINUOUS SECTION OF PIPE ON EACH SIDE OF THE GATE VALVE UNFEASIBLE, RESTRAINED PIPE JOINTS SHALL BE INSTALLED BETWEEN THE TEE AND GATE VALVE IN LIEU OF RODDING. HOWEVER, A RODDED CONTINUOUS SECTION OF PIPE SHALL ALWAYS BE INSTALLED BETWEEN THE GATE VALVE AND HYDRANT.

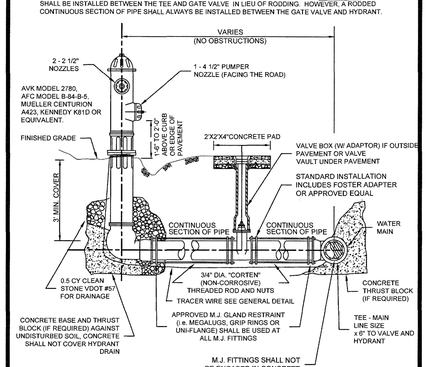

WESTERN VIRGINIA REGIONAL - CONSTRUCTION DETAIL

FIRE HYDRANT ASSEMBLY — 02/10/15 — W-17

20 / C102 C502

1. TRAFFIC BEARING BOX REQUIRED IN TRAFFIC AREAS.
2. SEWER LATERAL AND CLEANOUT PIPING SHALL BE ASTM D3034 SDR 26. SEWER LATERAL FITTINGS SHALL BE OF SAME SDR RATING AS THE SEWER MAIN. SCHEDULE 40 SOLVENT WELD PIPE AND FITTINGS MAY BE USED FOR THE SEWER LATERAL AND CLEANOUT ASSEMBLY WITH APPROVAL FROM THE PARTICIPATING UTILITY.
3. ALL PIPE SHALL BE OF SIZE SHOWN.
4. NO BENDS ARE ALLOWED IN THE LATERAL FROM THE MAIN TO THE CLEAN-OUT STACK WYE. (EXCEPT AS NOTED.)
5. ALL MAIN LINE TAPS ON ACTIVE MAIN SHALL BE PERFORMED BY PARTICIPATING UTILITY.
6. PIPING ON PRIVATE SIDE OF CLEANOUT TO BE INSTALLED PER GOVERNING JURISDICTION REQUIREMENTS.
7. MINIMUM COVER FOR ALL SEWER LATERALS SHALL BE THREE (3') FEET.
8. PROPERTY OWNER RESPONSIBLE FOR INSTALLING CLEANOUT ON PROPERTY LINE WHEN MAINTENANCE OCCURS, IN ACCORDANCE WITH THIS DETAIL.
9. LOWEST SERVED FINISHED FLOOR ELEVATION SHALL BE A MINIMUM OF THREE FEET (3') ABOVE THE TOP OF THE MAIN AT THE POINT WHERE THE SERVICE LATERAL CONNECTS TO THE MAIN.
10. WHEN CONNECTING TO EXISTING LATERAL USE FERNCO FLEXIBLE COUPLING.

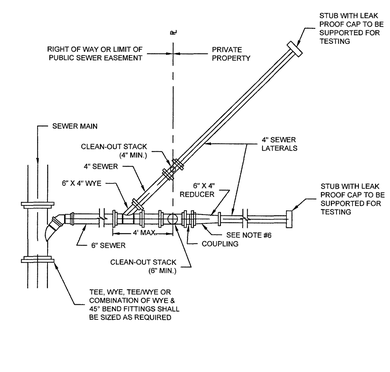

WESTERN VIRGINIA REGIONAL - CONSTRUCTION DETAIL

DOUBLE LATERAL COMBINED 6" BY TWO 4" LATERALS — 01/01/14 — S-7

21 / C102 C502

KEY PLAN

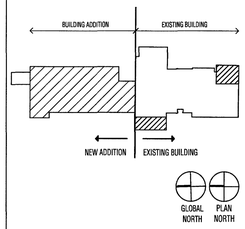

GENERAL NOTES

City of Roanoke
Planning, Building, & Development
COMPREHENSIVE DEVELOPMENT PLAN
APPROVED
by plkr1
06/02/2017

SPECTRUM DESIGN
architects | engineers

10 CHURCH AVE SE, PLAZA SUITE 1 ROANOKE, VIRGINIA 24011 540.342.6001

CLAUDE MOORE COMPLEX ADDITION
ROANOKE, VA

PROJECT CODE #: 935-18158

SPECTRUM DESIGN PROJECT NO. 14132

COMMONWEALTH OF VIRGINIA — MICHAEL A. RAKES — Lic. No. 28199 — 9/18/2016 — PROFESSIONAL ENGINEER

DATE	18 SEPTEMBER 2016
DESIGN ARCHITECT	
PROJECT ARCHITECT	
PROJECT ENGINEER	MAR
CHECKED BY	
DRAWN BY	THL
REVISIONS	NUMBER DATE

SHEET TITLE

GENERAL DETAILS

C502

J:\14132\Civil\14132 Cbas.dwg, 11/4/2016 4:46:39 PM, DWG To PDF.pc3