1. PUBLIC EASEMENT WIDTH SHALL BE DETERMINED BASED ON 1:1 SIDE SLOPE EXTENDING FROM THE FINISHED GRADE TO OUTSIDE EDGE OF PIPE (NOMINAL PIPE DIAMETER). ROUNDED UP TO THE NEAREST 5' INCREMENT, OR 20' MINIMUM, WHICHEVER IS GREATER.
2. THIS EASEMENT SHALL EXTEND ALONG THE ENTIRE LENGTH OF THE SUBJECT PIPE AT LEAST ONE HALF THE DISTANCE OF EASEMENT PAST CENTER OF LAST MANHOLE OR WATER APPURTENANCE.

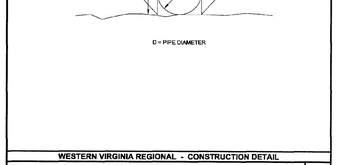

WESTERN VIRGINIA REGIONAL - CONSTRUCTION DETAIL

SANITARY SEWER AND WATER LINE EASEMENTS — 01/01/14 — G-3

1. TRACER WIRES SHALL BE INSTALLED IN ALL WATER MAINS, TRACER WIRE ACCESS BOXES, VALVE BOXES OR VAULTS, WATER METERS AND FIRE HYDRANTS AS ACCESS POINTS.
2. FOR WATER AND SEWER INSTALLED BY OPEN TRENCHING, HORIZONTAL DIRECTIONAL DRILLING, OR PIPE BURSTING, TRACER WIRE SHALL BE INSTALLED TRACE SAFE WITH BLUE COLORED TRACER WIRE OR APPROVED EQUAL.
3. FOR WATER AND SEWER INSTALLED BY PIPE JACKING OR BORING, TRACER WIRE SHALL BE INSTALLED WITH A WIRE-TO-WATER PIPE CORE SLEEVE AS REFIRED TRACE SAFE WATER BLOCKING CONNECTORS OR APPROVED EQUAL. SPLICES SHALL BE MADE IN ACCORDANCE WITH THE MANUFACTURERS INSTALLATION INSTRUCTIONS. CONTRACTOR WILL BE RESPONSIBLE FOR ENSURING CONTINUITY AT ALL TRUCK LOCATIONS.
4. WHERE HDPE PIPE IS INSTALLED WITH OUT STEEL CASING PIPE, SUCH AS A DIRECTIONALLY DRILLED CROSSINGS, AND CONNECTED TO DUCTILE IRON PIPE ON EACH SIDE, CONTRACTOR SHALL INSTALL ONE ADDITIONAL TRACER WIRE ALONG THE HDPE PIPE WITH A MINIMUM OF TWO (2) ACCESS POINTS, ONE AT EACH END. CONTRACTOR TRANSITIONS TO TRACE SAFE WIRE AND ACCESS POINT IN ACCORDANCE WITH THIS DETAIL. ANY TRANSITION FROM DUCTILE IRON MAIN TO NON-DUCTILE IRON MAIN SHALL HAVE AN ACCESS POINT TO BEGIN TRACER WIRE.
5. AS-BUILT STRIPS SHOW TRACER WIRE LOCATION AND ACCESS POINTS (ID), ALONG WITH BUTT, BR, ISF LOCATIONS.
6. THE TRACER WIRE SHALL BE PLACED ALONG THE LOWER QUADRANT OF THE PIPE. THE WIRE SHALL NOT TOUCH THE PIPE, BUT SHALL BE A MAXIMUM OF 9" FROM THE PIPE. NON-METALLIC SPACERS MAY BE USED TO MAINTAIN A SET DISTANCE FROM THE UTILITY.
7. WIRE SHALL BE BROUGHT TO THE SURFACE EVERY **FIVE-HUNDRED (500) FEET** AND PLACED IN A WATER METER BOX OR A DAMANG & WATER SOLUTIONS, INC. (OR APPROVED EQUAL) 1" CAST IRON TRACER WIRE ACCESS BOX.
8. THE TRACER WILL BE TESTED BY THE PARTICIPATING UTILITY AS PART OF THE PROJECTS FINAL ACCEPTANCE. CONTRACTOR WILL BE RESPONSIBLE FOR REPAIRING ANY BREAKS IN THE TRACER WIRE.
9. THE GROUND WIRE SHALL BE WIRE CONFIGURATION AND SHALL BE OF ADEQUATE LENGTH TO REMAIN A MINIMUM DISTANCE OF **FIFTY (50) FEET** OVER THE TOP OF THE STRUCTURE. THE END OF THE GROUND WIRE SHALL CONNECT TO THE GROUND BAR OR LID TERMINAL USING A BURNDY KAR2 MECHANICAL TERMINAL LUG.
10. A GROUND ROD SHALL BE INSTALLED AT EACH LOCATION WHERE GROUND WIRE BURIED/CASE AND CONNECTS TO GROUND BAR OR LID TERMINAL. BE COPPER COATED WITH A MINIMUM DIAMETER OF 3/8" AND SHALL BE BURIED A MINIMUM OF FOUR (4) FEET INTO THE GROUND.
11. THE GROUND BAR SHALL BE STAINLESS STEEL AND SHALL BE ATTACHED USING (6) 2" X 1/2" (6) HEX TAPCON. THE FOLLOWING SHALL BE INSTALLED IN A FOUR CENTER HOLES: 10-32(6) NUTS, #10 (6) WASHERS AND 10-32 X (6) PHILLIPS. THE FOURTH HOLE SHALL HAVE A BURNDY KAR2 MECHANICAL TERMINAL LUG FOR THE #6 AWG GROUND WIRE. THE ASSEMBLY CAN BE ACQUIRED AT HCB INDUSTRIAL SUPPLY, INC. (540-353-0665) - C) AMP PIG-11. THE ROOF OF THE TRACER WIRE SHALL BE PLACED IN THE GROUND BAR AS SHOWN BELOW.
12. WHERE THE TRACER WIRE BOX AS ACCESS POINT, GROUND BAR WILL NOT BE REQUIRED. WIRES SHALL BE CONNECTED AS SHOWN BELOW. TRACER WIRE SHALL BE OF ADEQUATE LENGTH TO EXTEND FOR 25 FEET ABOVE THE TOP OF ACCESS BOX.
13. TWO WRAPS OF TRACER WIRE SHALL BE WRAPPED SNUGGLY AROUND BASE OF HYDRANT. WIRE SHALL NOT BE LEFT IN A WAY THAT WOULD INTERFERE WITH WORKING AROUND HYDRANT.
14. WHEN USING ALL DUCTILE MAIN, TRACER WIRE FOR SERVICES SHALL BE 12 AWG COPPER TRACER WIRE. TRACER WIRE SHALL HAVE SAME WIRE CONTACT TO DUCTILE MAIN.

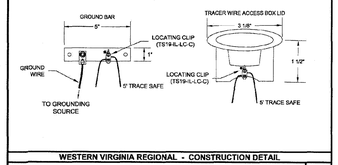

WESTERN VIRGINIA REGIONAL - CONSTRUCTION DETAIL

TRACER WIRE FOR NON-METALLIC PRESSURE PIPE — 09/06/16 — G-4

BLUE = TRACE SAFE TRACER WIRE
BLACK = GROUND WIRE & GROUND BAR
TS19-IL-LC-C = TRACE SAFE LOCATING CLIP AT GROUND BAR
TS19-C = SERVICE LATERAL TRACE SAFE CONNECTOR
GROUND WIRE = #6 AWG COPPER WIRE
NOTE: LEAVE FIVE FEET (5') OF EXCESS TRACER WIRE COILED UP IN VAULT

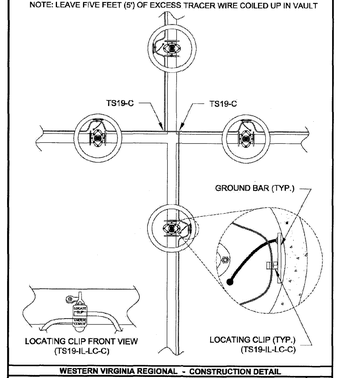

WESTERN VIRGINIA REGIONAL - CONSTRUCTION DETAIL

TRACER WIRE SAMPLE TEE/CROSS INTERSECTION — 09/06/16 — G-4A

1. BEDDING, HAUNCHING AND INITIAL BACKFILL CONSTRUCTION SHALL BE IN ACCORDANCE WITH THIS DETAIL AND MANUFACTURERS RECOMMENDATION.
2. ALL PVC PIPE SHALL BE BEDDED IN COMPACTED VDOT #57 OR #68 STONE, OR CRUSHER RUN.
3. IN AREAS SUBJECTED TO VEHICULAR TRAFFIC, BEDDING STONE AND FILL SHALL BE PLACED IN 6" LIFTS FROM BOTTOM OF TRENCH TO 1' ABOVE THE PIPE, AND THE REMAINING SHALL BE PLACED IN 10" LIFTS AND SHALL BE COMPACTED TO AT LEAST 90% OF MAXIMUM DENSITY AS DETERMINED BY ASTM D 698.
4. BEDDING REQUIREMENTS FOR DUCTILE IRON WATER LINE ARE DEPENDENT ON MANUFACTURERS BEDDING CRITERIA.
5. ALL EXCAVATIONS SHALL COMPLY WITH OSHA TECHNICAL MANUAL, CHAPTER 2, TITLED "EXCAVATIONS: HAZARD RECOGNITION IN TRENCHING AND SHORING."
6. THE TRACER WIRE SHALL BE PLACED ALONG THE LOWER QUADRANT OF THE PIPE. THE WIRE SHALL NOT TOUCH THE PIPE, BUT SHALL BE A MAXIMUM OF 9" FROM THE PIPE. NON-METALLIC SPACERS MAY BE USED TO MAINTAIN A SET DISTANCE FROM THE UTILITY.

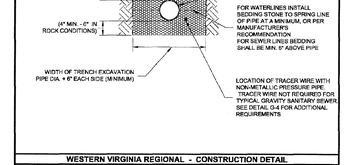

WESTERN VIRGINIA REGIONAL - CONSTRUCTION DETAIL

BEDDING AND BACKFILL OUTSIDE OF PAVED AREAS — 08/01/16 — G-11

1. BEDDING, HAUNCHING AND INITIAL BACKFILL CONSTRUCTION SHALL BE IN ACCORDANCE WITH THIS DETAIL AND MANUFACTURERS RECOMMENDATION.
2. ALL PVC PIPE SHALL BE BEDDED IN COMPACTED VDOT #57 OR #68 STONE, OR CRUSHER RUN.
3. IN VDOT ROW, THE CONTRACTOR SHALL REPLACE THE PAVEMENT AS REQUIRED AND SPECIFIED BY VDOT. IN ROANOKE CITY, CONTRACTOR SHALL REPLACE PAVEMENT AS REQUIRED BY CITY OF ROANOKE RIGHT OF WAY EXCAVATION AND RESTORATION STANDARDS, LATEST EDITION.
4. ALL CONSTRUCTION WITHIN THE PUBLIC RIGHT-OF-WAY SHALL BE AS SPECIFIED BY VDOT OR APPLICABLE LOCALITY.
5. PRIOR TO CONSTRUCTION, CONTRACTOR IS RESPONSIBLE FOR SECURING ALL REQUIRED PERMITS FROM VDOT AND/OR APPLICABLE LOCALITY.
6. IN AREAS SUBJECTED TO VEHICULAR TRAFFIC, BEDDING STONE AND FILL SHALL BE PLACED IN 6" LIFTS AND SHALL BE COMPACTED TO AT LEAST 95% OF MAXIMUM DENSITY AS DETERMINED BY ASTM D 698.
7. ALL SEWER LINES PIPE SHALL BE BEDDED IN COMPACTED GRANULAR MATERIAL. BEDDING REQUIREMENTS FOR DUCTILE SEWER LINE ARE DEPENDENT ON MANUFACTURERS BEDDING CRITERIA.
8. BEDDING CUT ON SIDE OF PAVEMENT SHALL BE IN ACCORDANCE WITH VDOT OR APPLICABLE LOCALITY'S SPECIFICATIONS.
9. ALL EXCAVATIONS SHALL COMPLY WITH OSHA TECHNICAL MANUAL, CHAPTER 2, TITLED "EXCAVATIONS: HAZARD RECOGNITION IN TRENCHING AND SHORING."
10. THE TRACER WIRE SHALL BE PLACED ALONG THE LOWER QUADRANT OF THE PIPE. THE WIRE SHALL NOT TOUCH THE PIPE, BUT SHALL BE A MAXIMUM OF 9" FROM THE PIPE. NON-METALLIC SPACERS MAY BE USED TO MAINTAIN A SET DISTANCE FROM THE UTILITY.

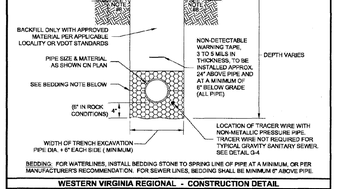

WESTERN VIRGINIA REGIONAL - CONSTRUCTION DETAIL

BEDDING AND BACKFILL UNDER PAVEMENT AND IN RIGHT-OF-WAY — 08/01/16 — G-12

1. MATERIALS AND FABRICATION IN ACCORDANCE WITH ASTM D419-90.
2. WHEN USED AS BAMFLING MANHOLE, FLOW SHALL PASS STRAIGHT THROUGH, I.E., 180°.
3. STEPS SHALL BE VERTICALLY ALIGNED. FIRST STEP SHALL BE WITHIN 12" OF COVER, BOTTOM STEP SHALL BE WITHIN 24" OF BOTTOM OF MANHOLE.
4. FRAME AND COVER SHALL BE PROPERLY ALIGNED WITH THE 2 FOOT OPENING OF THE MANHOLE STRUCTURE AND BOLTED IN PLACE.
5. FLAT TOP MANHOLES MAY ONLY BE SUBSTITUTED WITH THE PERMISSION OF THE PARTICIPATING UTILITY.
6. FLEXIBLE JOINT MANHOLE CONNECTION SHALL BE AS MANUFACTURED BY PRES-SEAL GASKET CORPORATION OR EQUAL.
7. GROUT ANNULAR SPACE BETWEEN PIPE AND PRECAST MANHOLE ON INSIDE OF MANHOLE.
8. WHEN REPLACING AN EXISTING MANHOLE OR INSTALLING A NEW PRECAST MANHOLE ON AN EXISTING SEWER, A MINIMUM OF SIX FEET (6') OF EXISTING PIPE SHALL BE REMOVED AND REPLACED WITH NEW PIPE TO THE OUTLET OF MANHOLE.
9. MANHOLE OUTLET INVERT IS LOWER THAN THE NORMAL GROUNDWATER ELEVATION (I.E., ALONG CREEKS, RIVERS, CANALS, ETC.) THE PIPE SHALL BE EQUIPPED WITH A FULL EXTERIOR COATING AND JOINT WRAP APPLIED IN ADDITION TO JOINT SEALANT. SEE NOTES 9 & 11.
10. IF REQUIRED EXTERIOR VERTICAL WALL SURFACES SHALL BE FACTORY COATED IN ACCORDANCE WITH THE MANUFACTURERS RECOMMENDATION. COATING SHALL BE HIGH BUILD COAL TAR EPOXY MEETING ASTM D1227. COATING SHALL BE APPLIED IN TWO COATS TO A MINIMUM TOTAL THICKNESS OF 16 MILS
11. IF REQUIRED ALL MANHOLES SHALL UTILIZE AN EXTERNAL FRAME AND JOINT SEAL AT ALL JOINTS AND AT THE FRAME/CHIMNEY/INTERFACE. SEAL SHALL BE MADE OF EPDM RUBBER NAGDAROC WITH ASTM D412 OR POLYOLEFIN BACKED EXTERIOR JOINT WRAP IN ACCORDANCE WITH ASTM E-154, E-477, AND C-990. EDM SEAL SHALL HAVE A MINIMUM THICKNESS OF 60 MILS. POLYOLEFIN BACKED EXTERIOR JOINT WRAP SHALL HAVE A BACKING BAND ELEMENT WITH MINIMUM THICKNESS OF 4 MILS. AND BUTYL ROLLER ADHESIVE WITH MINIMUM THICKNESS OF 80 MILS. SEAL SHALL ADDRESS/VELY BOND TO CONCRETE AND METAL STRUCTURES.
12. FOR PIPE LARGER THAN 18 INCHES IN DIAMETER, THE MINIMUM INSIDE DIAMETER OF THE MANHOLE SHALL BE IN ACCORDANCE WITH MANUFACTURERS RECOMMENDATIONS BASED ON PIPE SIZE AND ANGLE BETWEEN INLET AND OUTLET PIPING.
13. 6" MINIMUM DIAMETER MANHOLE SHALL BE REQUIRED WHEN DEPTHS EXCEED 15' UNLESS OTHERWISE APPROVED BY PARTICIPATING UTILITY.

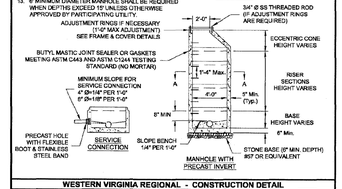

WESTERN VIRGINIA REGIONAL - CONSTRUCTION DETAIL

4' STANDARD MANHOLE FOR PIPE 15" OR SMALLER (FOR DEPTHS UP TO 15 FEET) — 08/01/16 — S-1

1. WATERTIGHT MANHOLE FRAME MODEL #1045Z BY EAST JORDAN IRON WORKS, INC. OR EQUIVALENT.
2. HDPE ADJUSTMENT RINGS SHALL MEET H-20 LOAD RATING, AND SHALL BE INTERLOCKING OR UTILIZE BUTYL MASTIC JOINT SEALANT BETWEEN EACH RING TO FORM A WATERTIGHT JOINT.
3. CONCRETE ADJUSTMENT RINGS SHALL MEET H-20 LOAD RATING AND UTILIZE BUTYL MASTIC JOINT SEALANT BETWEEN EACH RING AND FRAME AN COVER TO FORM A WATERTIGHT JOINT.
4. FRAME HEIGHT SHALL BE 7" FOR SERVICE LOCATIONS AND 4" FOR EXPOSED LOCATIONS.

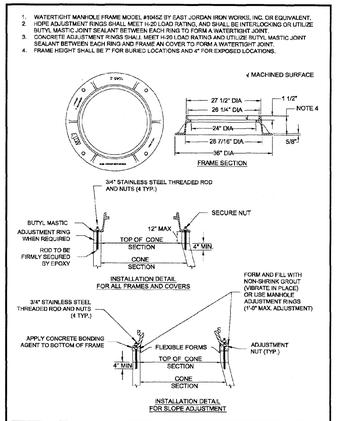

WESTERN VIRGINIA REGIONAL - CONSTRUCTION DETAIL

WATERTIGHT MANHOLE FRAME — 01/01/14 — S-4

1. 2" LETTERS (RECESSED FLUSH)
2. STOP LUGS FOR CAM
3. NON-SLIP TEXTURE
4. (2) CLOSED FROM LUGS
5. (2) PICKSARS SEE DETAIL BELOW
6. FOR PARTICIPATING UTILITIES OTHER THAN THE WVWA, GENERIC NON-LOGO MANHOLE COVERS LABELED "SEWER" SHALL BE SUBSTITUTED
7. 1/4" DIA. NEOPRENE GASKET

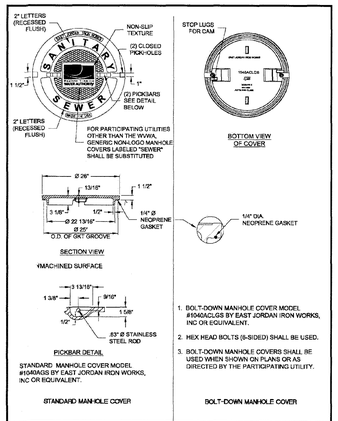

WESTERN VIRGINIA REGIONAL - CONSTRUCTION DETAIL

WATERTIGHT MANHOLE COVER — 01/01/14 — S-5

1. TRAFFIC BEARING BOX AND LID REQUIRED IN TRAFFIC AREAS (CAPITOL FOUNDRY VB-6F3).
2. SEWER LATERAL AND CLEANOUT PIPING SHALL BE ASTM D3034 SDR 26. SEWER LATERAL FITTINGS SHALL BE OF SAME SDR RATING AS THE SEWER MAIN. SCHEDULE 40 SOLVENT WELD PIPE AND FITTINGS MAY BE USED FOR THE SEWER LATERAL AND CLEANOUT ASSEMBLY WITH APPROVAL FROM THE PARTICIPATING UTILITY.
3. ALL PIPE SHALL BE OF SAME SIZE.
4. NO BENDS ARE ALLOWED IN THE LATERAL FROM THE MAIN TO THE CLEANOUT STACK WYE. (EXCEPT FOR DEEP SEWER, AS SHOWN BELOW).
5. ALL MAIN LINE TAPS ON ACTIVE MAINS SHALL BE PERFORMED BY PARTICIPATING UTILITY.
6. PIPING ON PRIVATE SIDE OF CLEANOUT TO BE INSTALLED PER GOVERNING JURISDICTION REQUIREMENTS.
7. MINIMUM LATERAL SIZE: 4" FOR RESIDENTIAL SERVICE, 6" FOR NON-RESIDENTIAL SERVICE.
8. SEWER CLEANOUTS SHALL BE SAME SIZE AS SEWER LATERAL.
9. MINIMUM COVER FOR ALL SEWER LATERALS SHALL BE THREE (3) FEET.
10. PROPERTY OWNER RESPONSIBLE FOR INSTALLING CLEANOUT ON PROPERTY LINE (IN ACCORDANCE WITH THIS DETAIL) WHEN MAINTENANCE OCCURS.
11. LOWEST SERVED FINISHED FLOOR ELEVATION SHALL BE A MINIMUM OF THREE FEET (3') ABOVE THE TOP OF THE MAIN AT THE POINT WHERE THE SERVICE LATERAL CONNECTS TO THE MAIN.
12. WHEN CONNECTING TO EXISTING LATERAL USE FERNCO FLEXIBLE COUPLING.

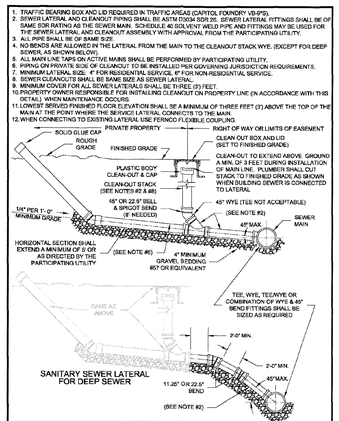

WESTERN VIRGINIA REGIONAL - CONSTRUCTION DETAIL

SANITARY SEWER LATERAL — 01/01/14 — S-6

1. TRAFFIC BEARING BOX REQUIRED IN TRAFFIC AREAS.
2. SEWER LATERAL AND CLEANOUT PIPING SHALL BE ASTM D3034 SDR 26. SEWER LATERAL FITTINGS SHALL BE OF SAME SDR RATING AS THE SEWER MAIN. SCHEDULE 40 SOLVENT WELD PIPE AND FITTINGS MAY BE USED FOR THE SEWER LATERAL AND CLEANOUT ASSEMBLY WITH APPROVAL FROM THE PARTICIPATING UTILITY.
3. ALL PIPE SHALL BE OF SIZE SHOWN.
4. NO BENDS ARE ALLOWED IN THE LATERAL FROM THE MAIN TO THE CLEAN-OUT STACK WYE. (EXCEPT AS NOTED.)
5. ALL MAIN LINE TAPS ON ACTIVE MAIN SHALL BE PERFORMED BY PARTICIPATING UTILITY.
6. PIPING ON PRIVATE SIDE OF CLEANOUT TO BE INSTALLED PER GOVERNING JURISDICTION REQUIREMENTS.
7. MINIMUM COVER FOR ALL SEWER LATERALS SHALL BE THREE (3) FEET.
8. PROPERTY OWNER RESPONSIBLE FOR INSTALLING CLEANOUT ON PROPERTY LINE WHEN MAINTENANCE OCCURS, IN ACCORDANCE WITH THIS DETAIL.
9. LOWEST SERVED FINISHED FLOOR ELEVATION SHALL BE A MINIMUM OF THREE FEET (3') ABOVE THE TOP OF THE MAIN AT THE POINT WHERE THE SERVICE LATERAL CONNECTS TO THE MAIN.
10. WHEN CONNECTING TO EXISTING LATERAL USE FERNCO FLEXIBLE COUPLING.

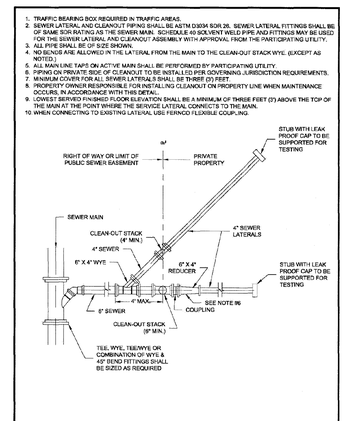

WESTERN VIRGINIA REGIONAL - CONSTRUCTION DETAIL

DOUBLE LATERAL COMBINED 6" BY TWO 4" LATERALS — 01/01/14 — S-7

1. FOR PIPES 18" AND LARGER PROVIDE A MASONRY BULKHEAD IN LIEU OF MECHANICAL PLUGS.

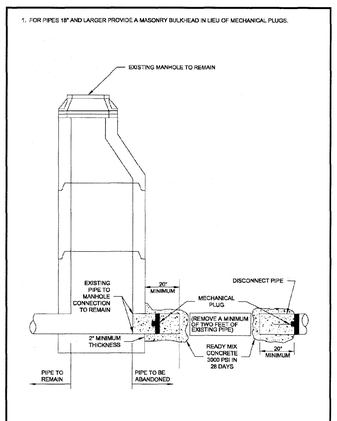

WESTERN VIRGINIA REGIONAL - CONSTRUCTION DETAIL

SANITARY SEWER PIPE ABANDONMENT AT A MANHOLE — 01/01/14 — S-15

1. SETTER TO BE A.Y. McDONALD 720-21WCD033, FORD VBH172-15W-11-33 OR APPROVED EQUAL.
2. SADDLES MUST BE USED WITH ALL PLASTIC DUCTILE IRON PIPE. SERVICE SADDLES SHALL BE USED IN ACCORDANCE WITH WATER DISTRIBUTION PIPING SPECIFICATION. SERVICE SADDLES FOR PLASTIC PIPE SHALL BE POWERSEAL 3417, OR 3412AS, ROMAC 202S, OR 106, OR FORD METER FS202 OR FS303. FOR DUCTILE IRON PIPE USE THE ABOVE OR POWERSEAL 3413, ROMAC 202 OR FORD METER FS202
3. METER BOX SHALL BE CARSONITE-STATES PLASTICS, INC. PLASTIC BOX WITH FORD "A" DOMESTIC SERIES FRAME W/ TH A NOOR DOMESTIC 12.25 CX LID WITH SENSUS RECESS AND WVWA LOGO. ADS CORRUGATED HDPE BOX WITH FORD "A" DOMESTIC SERIES FRAME WITH A NOOR DOMESTIC 12.25 CX LID WITH SENSUS RECESS AND WVWA LOGO OR APPROVED EQUAL. METER BOX SHALL NOT BE PLACED IN AREAS SUBJECT TO VEHICULAR TRAFFIC. IF TRAFFIC BEARING BOX IS REQUIRED, DESIGN ENGINEER SHALL CONSULT WITH PARTICIPATING UTILITY TO DETERMINE SITE SPECIFIC REQUIREMENTS.
4. WHENEVER SIDEWALK EXISTS OR IS PROPOSED, MODIFY METER LOCATION AS DIRECTED.
5. CORPORATION STOP SHALL BE FORD FB1000-4-Q-NL, MUELLER B-25008 OR APPROVED EQUAL.
6. SERVICE SHALL BE "K" TYPE COPPER, OR COPPER TUBE SIZE POLYETHYLENE (PE) 4710, SDDR-9 (200 psi).

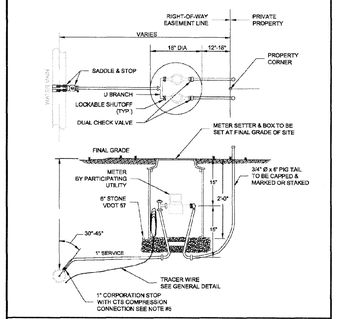

WESTERN VIRGINIA REGIONAL - CONSTRUCTION DETAIL

DOUBLE RESIDENTIAL WATER SERVICE (LINE PRESSURE UNDER 120 PSI) — 09/07/17 — W-4

1. THE 2" PIPING AND "STREET ELL" SHALL BE LEAD FREE BRASS OR DUCTILE IRON.
2. PIPE JOINTS SHALL BE RESTRAINED BEFORE GATE VALVE IN ACCORDANCE WITH DISTANCE SHOWN IN THE "MINIMUM THRUST RESTRAINT OF PIPE JOINTS DESIGN LENGTHS" DETAIL FOR VALVE / PLUG. PIPE JOINTS BETWEEN GATE VALVE AND BLOWOFF SHALL ALSO BE RESTRAINED.

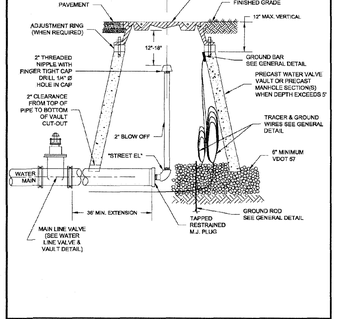

WESTERN VIRGINIA REGIONAL - CONSTRUCTION DETAIL

TEMPORARY END OF LINE BLOW-OFF ASSEMBLY — 01/01/14 — W-11

1. USE MOISTURE/LY STIFF MIX OF NON SHRINK GROUT, SAND, AND 1/2" AND LESS DIAMETER GRAVEL WITH 28 DAYS, STRENGTH AT MINIMUM 3,000 P.S.I.
2. MIX IS TO BE FORCED INTO ALL GROOVES AND UNDER FLANGE OF FRAME AND LEFT AT OR ABOVE TOP OF FLANGE.
3. DO NOT BACKFILL AROUND FRAME AND COVER, FOR 48 HOURS AFTER CONCRETE IS PLACED. THE USE OF HIGH EARLY STRENGTH CEMENT WOULD REDUCE TIME TO (24 HRS.)
4. RESTRIC