1. SETTER TO BE A.Y. McDONALD 20-215WXDD33, FORD V872-15W-11-33 OR APPROVED EQUAL.
2. SADDLE MUST BE USED WITH ALL PLASTIC & DUCTILE IRON PIPE. SERVICE SADDLES SHALL BE USED IN ACCORDANCE WITH WATER DISTRIBUTION PIPING SPECIFICATION. SERVICE SADDLES FOR PLASTIC PIPE SHALL BE: POWERSEAL 3417, OR 3412AS, ROMAC 202S, OR 306, OR FORD METER FS202 OR FS303. FOR DUCTILE IRON PIPE USE THE ABOVE OR POWERSEAL 3413, ROMAC 202 OR FORD METER F202.
3. METER BOX SHALL BE CARSON/MID-STATES PLASTICS, INC. PLASTIC BOX WITH FORD A32-T (ELECTRONIC READ LID), ADS CORRUGATED HDPE BOX WITH FORD A32-T (ELECTRONIC READ LID), OR A. Y. McDONALD MODEL 74M32CTC CAST IRON BASE & COVER OR APPROVED EQUAL. METER BOX SHALL NOT BE PLACED IN AREAS SUBJECT TO VEHICULAR TRAFFIC. IF TRAFFIC BEARING BOX IS REQUIRED, DESIGN ENGINEER SHALL CONSULT WITH PARTICIPATING UTILITY TO DETERMINE SITE SPECIFIC REQUIREMENTS. METER BOX & COVER DIAMETERS SHALL BE THE SAME.
4. CORPORATION STOP SHALL BE FORD F1000-4-G OR APPROVED EQUAL.
5. SERVICE SHALL BE "K" TYPE COPPER, OR COPPER TUBE SIZE POLYETHYLENE (PE) 4710, SODR-9 (200 psi).
6. WHENEVER SIDEWALK EXISTS OR IS PROPOSED, MODIFY METER LOCATION AS DIRECTED.

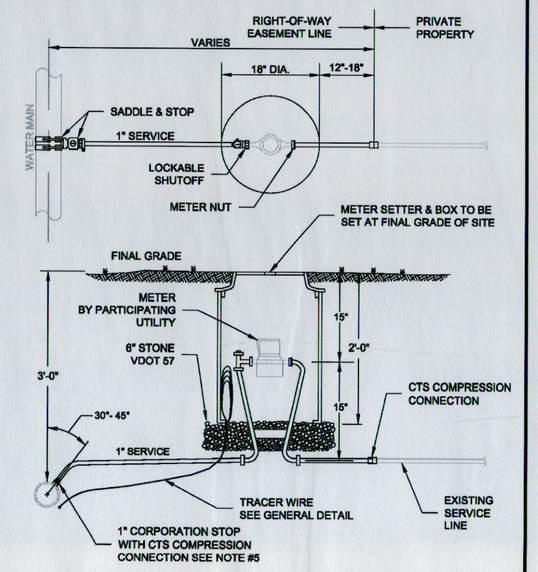


**WESTERN VIRGINIA REGIONAL - CONSTRUCTION DETAIL**

SINGLE RESIDENTIAL WATER SERVICE (REPLACEMENT OF EXISTING SERVICE) — 01/01/14 — **W-2**

1. SETTER TO BE A.Y. McDONALD 20-215 WDD033, FORD VBHH72-15W-11-33 OR APPROVED EQUAL.
2. SADDLES MUST BE USED WITH ALL PLASTIC DUCTILE IRON PIPE. SERVICE SADDLES SHALL BE USED IN ACCORDANCE WITH WATER DISTRIBUTION PIPING SPECIFICATION. SERVICE SADDLES FOR PLASTIC PIPE SHALL BE POWERSEAL 3417, OR 3412AS, ROMAC 202S, OR 306, OR FORD METER FS202 OR FS303. FOR DUCTILE IRON PIPE USE THE ABOVE OR POWERSEAL 3413, ROMAC 202 OR FORD METER F202.
3. METER BOX SHALL BE CARSON/MID-STATES PLASTICS, INC. PLASTIC BOX WITH FORD A32-T (ELECTRONIC READ LID), ADS CORRUGATED HDPE BOX WITH FORD A32-T (ELECTRONIC READ LID), OR A. Y. McDONALD MODEL 74M32CTC CAST IRON BASE & COVER OR APPROVED EQUAL. USE OF TRAFFIC BEARING BOX SHALL BE APPROVED BY THE AUTHORITY. METER BOX SHALL NOT BE PLACED IN AREAS SUBJECT TO VEHICULAR TRAFFIC. IF TRAFFIC BEARING BOX IS REQUIRED, DESIGN ENGINEER SHALL CONSULT WITH PARTICIPATING UTILITY TO DETERMINE SITE SPECIFIC REQUIREMENTS. METER BOX & COVER DIAMETERS SHALL BE THE SAME.
4. WHENEVER SIDEWALK EXISTS OR IS PROPOSED, MODIFY METER LOCATION AS DIRECTED.
5. CORPORATION STOP SHALL BE FORD F1000-4-G OR APPROVED EQUAL.
6. SERVICE SHALL BE "K" TYPE COPPER, OR COPPER TUBE SIZE POLYETHYLENE (PE) 4710, SODR-9 (200 psi).

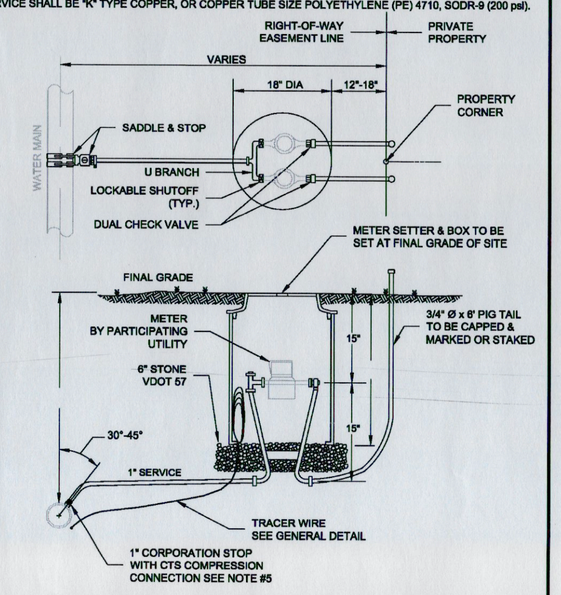


**WESTERN VIRGINIA REGIONAL - CONSTRUCTION DETAIL**

DOUBLE RESIDENTIAL WATER SERVICE (LINE PRESSURE UNDER120 PSI) — 01/01/14 — **W-4**

1. ALL METERS ARE TO BE PROVIDED AND INSTALLED BY PARTICIPATING UTILITY AT OWNER/DEVELOPERS EXPENSE. METER BOX, SERVICE, AND SETTER TO BE FURNISHED AND INSTALLED BY OWNER/DEVELOPER IN ACCORDANCE WITH THE MINIMUM REQUIREMENTS SHOWN BELOW.
2. SADDLES MUST BE USED WITH ALL PLASTIC & DUCTILE IRON PIPE. SERVICE SADDLES SHALL BE USED IN ACCORDANCE WITH WATER DISTRIBUTION PIPING SPECIFICATION. SERVICE SADDLES FOR PLASTIC PIPE SHALL BE: POWERSEAL 3417, OR 3412AS, ROMAC 202S, OR 306, OR FORD METER FS202 OR FS303. FOR DUCTILE IRON PIPE USE THE ABOVE OR POWERSEAL 3413, ROMAC 202 OR FORD METER F202.
3. CORPORATION STOP SHALL BE FORD F1000-4-G, MUELLER H-15000 OR APPROVED EQUAL.
4. METER BOXES LOCATED IN AN AREAS SUBJECT TO VEHICULAR TRAFFIC SHALL BE CONCRETE WITH H-20 RATED TRAFFIC BEARING HATCH. ALL OTHER METER BOXES MAY BE CARSON/MID-STATES PLASTICS, INC. PLASTIC BOX WITH FORD A32-T (ELECTRONIC READ LID), ADS CORRUGATED HDPE BOX WITH FORD A32-T (ELECTRONIC READ LID), OR A. Y. McDONALD MODEL 74M32C-TC CAST IRON BASE & COVER OR APPROVED EQUAL.
5. SERVICE SHALL BE "K" TYPE COPPER OR P.E. 4710 ,CTS O.D., MINIMUM CELL CLASS 445474E AND 445474D.
6. COPPER METER SETTER TO BE FORD, A.Y. MCDONALD OR APPROVED EQUAL WITH ANGLE DUAL CHECK VALVE, AND BYPASS HAVING LOCKABLE SHUTOFF VALVE.
7. SERVICES REQUIRING METERS LARGER THAN 2-INCH SHALL BE REVIEWED BY THE PARTICIPATING UTILITY ON A CASE BY CASE BASIS.

TRAFFIC BEARING LOCATION

TRAFFIC BEARING VAULT AND H-20 RATED HATCH SHALL BE SIZED IN ACCORDANCE WITH DIMENSIONAL REQUIREMENTS SHOWN BELOW.

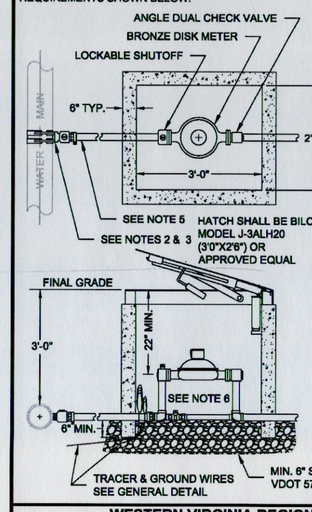


NON TRAFFIC BEARING LOCATION

SIZING CHART

| METER SIZE | BOX DIA. (MIN.) | COVER DIA. (MIN.) |
|---|---|---|
| 5/8" | 18" | 18" |
| 3/4"- 1" | 24" | 24" |
| 1 1/2"-2" | 30" | 30" |

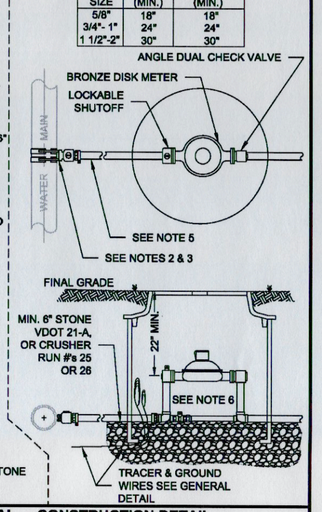


**WESTERN VIRGINIA REGIONAL - CONSTRUCTION DETAIL**

COMMERCIAL WATER SERVICE METER SIZES 5/8" - 2" — 01/01/14 — **W-5**

1. PUBLIC HYDRANTS SHALL BE PAINTED SILVER WITH AN OIL-BASED PAINT. PRIVATE HYDRANTS SHALL ALSO BE PAINTED SILVER WITH AN OIL-BASED PAINT UNLESS OTHERWISE SPECIFIED BY THE JURISDICTIONAL FIRE MARSHALL.
2. FIRE HYDRANT SHALL BE INSTALLED 2' MIN. AND 4' MAX. FROM BACK OF CURB OR 6' MIN. AND 12' MAX. FROM EDGE OF PAVEMENT WHEN CURB IS NOT PRESENT. FIRE HYDRANT TO BE INSTALLED WITHIN RIGHT-OF-WAY OR EASEMENT LINE.
3. AREA AROUND HYDRANT AT A RADIUS OF 4' TO BE LEVEL AND UNOBSTRUCTED.
4. WATERPROOF BAGS OR OUT OF SERVICE RINGS SHALL BE PLACED OVER ALL NEWLY INSTALLED FIRE HYDRANTS.
5. HIGH PRESSURE (OVER 120 PSI) REQUIRES THE USE OF ALL 3 RESTRAINTS.
6. IF DURING CONSTRUCTION THE SEASONAL WATER LEVEL IS NOTED TO BE ABOVE THE DRAIN OUTLETS OF THE PROPOSED HYDRANT, THE PARTICIPATING UTILITY WILL BE NOTIFIED IMMEDIATELY SO THAT THE HYDRANT CAN BE RELOCATED TO A SUITABLE LOCATION, OMITTED, OR THE DRAIN HOLE PLUGGED.
7. TWO WRAPS OF TRACER WIRE SHALL BE WRAPPED AROUND BASE OF HYDRANT.
8. APPROVED MODELS - AVK MODEL 2780, AFC MODEL 8-84-B, MUELLER CENTURION A423, KENNEDY K81D EQUIVALENT.

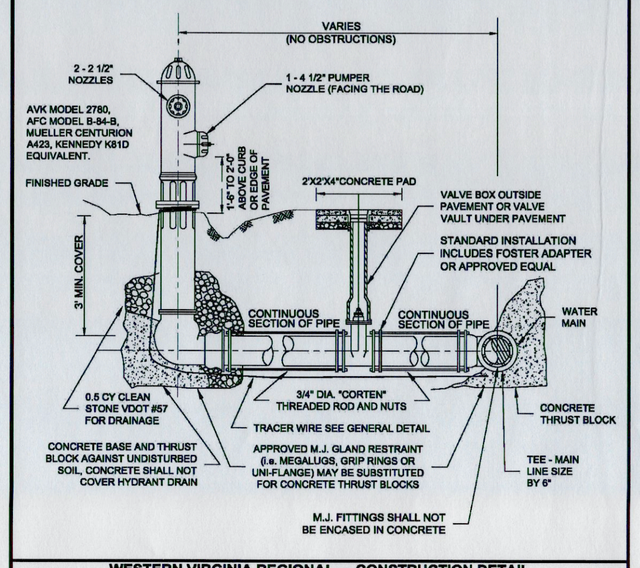


**WESTERN VIRGINIA REGIONAL - CONSTRUCTION DETAIL**

FIRE HYDRANT ASSEMBLY — 01/01/14 — **W-17**

1. FILTER FABRIC TO BE INSTALLED BETWEEN BOTTOM OF PIPE AND STONE BEDDING. FABRIC TO EXTEND VERTICALLY A MINIMUM OF 6" FROM BOTTOM OF VAULT (FULL CIRCUMFERENCE).

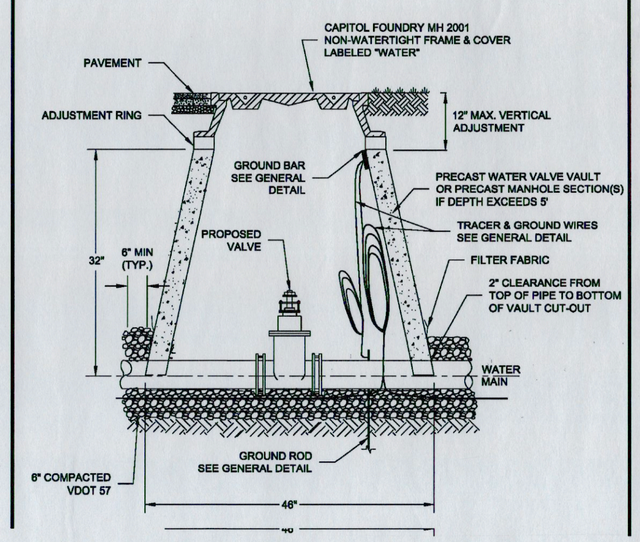


1. BEDDING, HAUNCHING AND INITIAL BACKFILL CONSTRUCTION SHALL BE IN ACCORDANCE WITH THIS DETAIL AND MANUFACTURER'S RECOMMENDATION.
2. ALL PVC PIPE SHALL BE BEDDED IN COMPACTED VDOT #57 OR #68 STONE.
3. IN VDOT ROW, THE CONTRACTOR SHALL REPLACE THE OPEN CUT WITH A MINIMUM TOP COURSE OF 1.5" (MINIMUM) VDOT SM-9.5A, BASE COURSE OF 8" VDOT BM-25.0, AND SUBBASE OF 10" VDOT 21B, OR AS REQUIRED BY VDOT. IN ROANOKE CITY, CONTRACTOR SHALL REPLACE PAVEMENT AS REQUIRED BY CITY OF ROANOKE RIGHT OF WAY EXCAVATION AND RESTORATION STANDARDS, LATEST EDITION.
4. ALL CONSTRUCTION WITHIN THE PUBLIC RIGHT-OF-WAY SHALL BE AS SPECIFIED BY VDOT OR APPLICABLE LOCALITY.
5. PRIOR TO CONSTRUCTION, CONTRACTOR IS RESPONSIBLE FOR SECURING ALL REQUIRED PERMITS FROM VDOT AND/OR APPLICABLE LOCALITY.
6. IN AREAS SUBJECTED TO VEHICULAR TRAFFIC, BEDDING STONE AND FILL SHALL BE PLACED IN 6" LIFTS AND SHALL BE COMPACTED TO AT LEAST 95% OF MAXIMUM DENSITY AS DETERMINED BY ASTM D 698.
7. ALL SEWER LINE PIPE SHALL BE BEDDED IN COMPACTED GRANULAR MATERIAL. BEDDING REQUIREMENTS FOR DUCTILE SEWER LINE ARE DEPENDENT ON MANUFACTURER'S BEDDING CRITERIA.
8. BENCH CUT ON EACH SIDE OF PAVEMENT: CITY OF ROANOKE = 12"; VDOT RIGHT-OF-WAY = 6".
9. ALL EXCAVATIONS SHALL COMPLY WITH OSHA TECHNICAL MANUAL, CHAPTER 2, TITLED "EXCAVATIONS: HAZARD RECOGNITION IN TRENCHING AND SHORING."
10. THE TRACER WIRE SHALL BE PLACED ALONG THE LOWER QUADRANT OF THE PIPE. THE WIRE SHALL NOT TOUCH THE PIPE, BUT SHALL BE A MAXIMUM OF 6" FROM THE PIPE. NON-METALLIC SPACERS MAY BE USED TO MAINTAIN A SET DISTANCE FROM THE UTILITY.

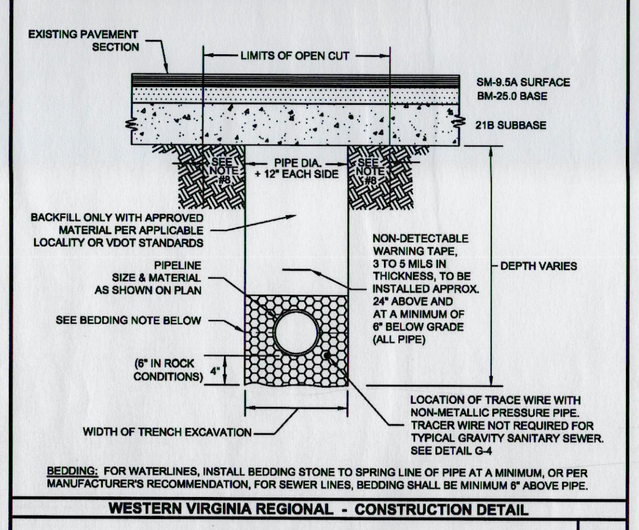


BEDDING: FOR WATERLINES, INSTALL BEDDING STONE TO SPRING LINE OF PIPE AT A MINIMUM, OR PER MANUFACTURER'S RECOMMENDATION, FOR SEWER LINES, BEDDING SHALL BE MINIMUM 8" ABOVE PIPE.

**WESTERN VIRGINIA REGIONAL - CONSTRUCTION DETAIL**

BEDDING AND BACKFILL UNDER PAVEMENT AND IN RIGHT-OF-WAY — 01/01/14 — **G-12**

FACTOR OF SAFETY = 1.5

| PIPE SIZE | PIPE MAT'L | 90° BEND | 45° BEND | 22 1/2° BEND | 11 1/4° BEND | VALVE PLUG | TEE BRANCH | REDUCER (NOTE 2) | VERT. 45° | VERT. 22° 1/2° | VERT. 11 1/4° |
|---|---|---|---|---|---|---|---|---|---|---|---|
| 6" | D.I. | 28' | 21' | 6' | 3' | 38' | 34' | 20' | 23' | 11' | 5' |
| 8" | D.I. | 37' | 21' | 7' | 4' | 51' | 47' | 21' | 30' | 15' | 7' |
| 10" | D.I. | 45' | 21' | 9' | 4' | 61' | 57' | 20' | 37' | 18' | 9' |
| 12" | D.I. | 53' | 22' | 11' | 6' | 73' | 69' | 38' | 43' | 21' | 10' |
| 6" | PVC | 30' | 21' | 6' | 3' | 56' | 38' | 29' | 35' | 17' | 8' |
| 8" | PVC | 40' | 21' | 8' | 4' | 74' | 56' | 31' | 46' | 22' | 11' |
| 10" | PVC | 47' | 21' | 9' | 5' | 86' | 62' | 30' | 56' | 27' | 13' |
| 12" | PVC | 56' | 23' | 11' | 6' | 106' | 88' | 58' | 66' | 32' | 16' |

1. ALL JOINTS SHALL BE RESTRAINED ON BOTH SIDES OF THE FITTING AND DOCUMENTED BY THE INSPECTOR FOR THE LENGTH SHOWN UNLESS OTHERWISE INDICATED.
2. REDUCER IS ONE SIZE SMALLER THAN PIPE LISTED. RESTRAINED LENGTH IS UPSTREAM ON THE LARGE SIDE OF THE REDUCER.
3. IF UNDER 100 PSI WORKING PRESSURE, RESTRAINED JOINT(S) ARE TO BE USED. IF EQUAL TO OR OVER 100 PSI WORKING PRESSURE, BOTH THRUST BLOCK AND RESTRAINED JOINTS SHALL BE USED.
4. FOR RESTRAINED JOINT PIPING REQUIREMENTS AT FITTING R.J. PVC AND R.J. DIP MAY BE USED INTERCHANGEABLY.

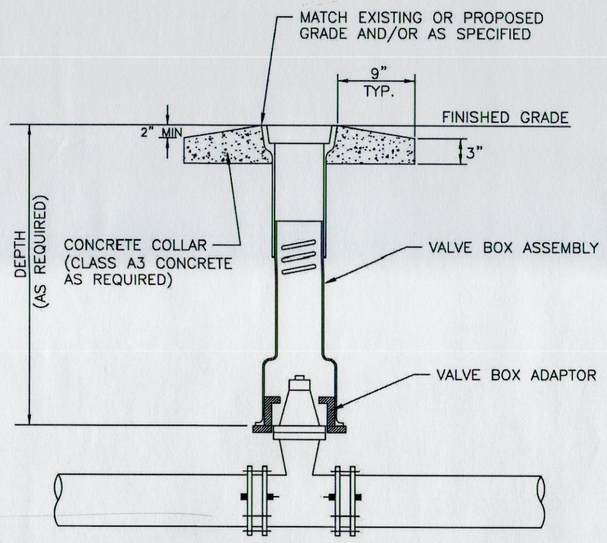


TYPICAL VALVE BOX INSTALLATION
(2-INCH VALVES)
NOT TO SCALE

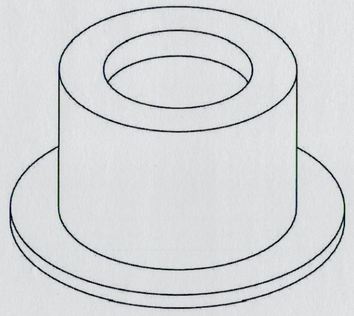

VALVE BOX ADAPTOR
(TYPE A-H)

TYPICAL VALVE BOX ADAPTOR
NOT TO SCALE

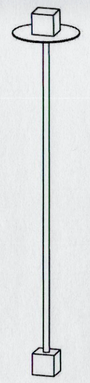

CENTERING RING TO KEEP ALIGNED IN VALVE BOX. 2" SQUARE SOCKET ON ONE END AND 2" SQUARE NUT ON THE OTHER.

TYPICAL VALVE STEM EXTENSION
NOT TO SCALE

1. TAPPING SLEEVE SHALL BE POWERSEAL MODEL 3490 TYPE 304 STAINLESS STEEL WITH CARBON STEEL FLANGE, ROMACTA MODEL SST III, FORD MODEL FTSS WITH CARBON STEEL FLANGE OR APPROVED EQUIVALENT. SLEEVE SHALL BE RATED AT 100 PSI OVER WORKING PRESSURE AND MUST HAVE A TEST PLUG.
2. TAPPING VALVE SHALL BE AWK RESILIENT SEATED GATE VALVE SERIES 25 MJFL, MUELLER T-2360 RESILIENT WEDGE TAPPING VALVE WITH MJFL, OR AFC SERIES 2500 RESILIENT WEDGE TAPPING VALVE WITH MJFL. VALVE SHALL BE RATED AT 250 PSI.
3. TAPPING SLEEVE AND VALVE SHALL BE FULL PORT TO ACCEPT FULL SIZE SHELL CUTTER.
4. STEEL FLANGE SHALL MEET AWWA C207.
5. SIZE-ON-SIZE TAPPING NOT ALLOWED UNLESS APPROVED BY PARTICIPATING UTILITY.

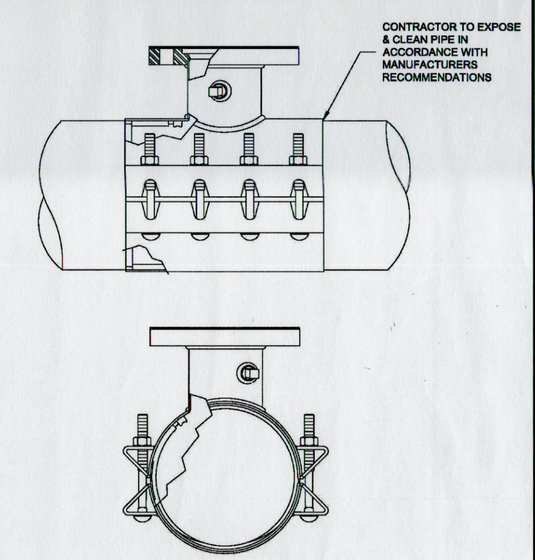


**WESTERN VIRGINIA REGIONAL - CONSTRUCTION DETAIL**

TAPPING SLEEVE AND VALVE — 01/01/14 — **W-21**

M:\215042 Cleveland Avenue - Town of Vinton\PRELIMINARY\215042.02_DET1.dwg

| NO. | SHEET REVISION | BY | DATE | NO. | SHEET REVISION | BY | DATE |
|---|---|---|---|---|---|---|---|

PRELIMINARY
NOT FOR CONSTRUCTION


WW ENGINEERS SURVEYORS PLANNERS ASSOCIATES
PO Box 4119, Lynchburg, VA 24502, Phone: 434.316.6080
3040 Avenues Square Pl, Charlottesville, VA 22911, Phone: 434.984.2700
www.wwassociates.net


| | | | | |
|---|---|---|---|---|
| DESIGNED BY: JMF | PROJECT: CLEVELAND AVENUE WATER LINE IMPROVEMENTS TOWN OF VINTON, VIRGINIA | | | SET REV. NO. – |
| DRAWN BY: TGW | TITLE: PROJECT DETAILS | | | DRAWING NUMBER: C-7 |
| DIHR BY: JAC | | | | SHEET NUMBER: 7 of 8 |
| WWA NUMBER: 215042.02 | FILE NAME: 215042.02_DET1.dwg | DISCIPLINE: CIVIL | SCALE: H: AS SHOWN V: N/A | DATE: 7-24-15 |