1. TRACER WIRES SHALL BE INSTALLED USING MANHOLES, TRACER WIRE ACCESS BOXES, VALVE BOXES OR VAULTS, WATER METERS AND FIRE HYDRANTS AS ACCESS POINTS.
2. FOR WATER AND SEWER INSTALLED BY OPEN TRENCHING, HORIZONTAL DIRECTIONAL DRILLING, OR PIPE BURSTING, TRACER WIRE SHALL BE NEPTCO TRACE-SAFE WATER BLOCKING TRACER WIRE OR APPROVED EQUAL.
3. SPLICES SHALL ONLY BE MADE WITH GEL FILLED CONNECTORS DESIGNED FOR WIRE WITH A WOVEN POLYESTER FIBER CORE SUCH AS NEPTCO TRACE-SAFE WATER BLOCKING CONNECTORS OR APPROVED EQUAL. SPLICES SHALL BE MADE IN ACCORDANCE WITH THE MANUFACTURER'S INSTALLATION INSTRUCTIONS. CONTRACTOR WILL BE RESPONSIBLE FOR ENSURING CONTINUITY AT ALL SPLICE LOCATIONS.
4. WHERE HDPE PIPE IS INSTALLED WITHOUT STEEL CASING PIPE, SUCH AS A DIRECTIONALLY DRILLED CROSSINGS, AND WHERE TRACER WIRE ENTERS THE GROUND AT THE END OF THE PIPE, TRACER WIRE SHALL BE INSTALLED ALONG FULL LENGTH OF HDPE PIPE WITH AN ACCESS POINT INSTALLED AT EACH HDPE/DUCTILE IRON TRANSITION. TRACER WIRE SHALL BE CONNECTED TO THE ACCESS POINT IN ACCORDANCE WITH THIS DETAIL. ANY TRANSITION FROM DUCTILE IRON MAIN TO NON-DUCTILE IRON MAIN SHALL HAVE AN ACCESS POINT TO BEGIN TRACER WIRE.
5. AS-BUILTS SHALL SHOW TRACER WIRE(S) LOCATION AND ACCESS POINT(S), ALONG WITH BUTT SPLICE LOCATIONS.
6. THE TRACER WIRE SHALL BE PLACED ALONG THE LOWER QUADRANT OF THE PIPE. THE WIRE SHALL NOT TOUCH THE PIPE, BUT SHALL BE A MAXIMUM OF 6" FROM THE PIPE. NON-METALLIC SPACERS MAY BE USED TO MAINTAIN A SET DISTANCE FROM THE UTILITY.
7. WIRE SHALL BE BROUGHT TO THE SURFACE EVERY **FIVE-HUNDRED (500) FEET** AND PLACED IN A WATER METER BOX OR A DRAINAGE & WATER SOLUTIONS, INC. (OR APPROVED EQUAL) ALL CAST IRON TRACER WIRE ACCESS BOX.
8. THE TRACER WILL BE TESTED BY THE PARTICIPATING UTILITY AS PART OF THE PROJECT'S FINAL ACCEPTANCE. CONTRACTOR WILL BE RESPONSIBLE FOR ENSURING ALL CONTINUITY OF TRACER WIRE.
9. THE GROUND WIRE SHALL BE #6 AWG COPPER WIRE AND SHALL BE OF ADEQUATE LENGTH TO EXTEND A MINIMUM OF (5) FIVE FEET BEYOND THE TOP OF THE STRUCTURE. THE END OF THE GROUND WIRED SHALL CONNECT TO THE GROUND BAR OR LID TERMINAL USING A BURNDY KA60 MECHANICAL TERMINAL LUG.
10. GROUND BAR SHALL BE INSTALLED AT EACH LOCATION WHERE GROUND WIRE SURFACES AND CONNECTS TO GROUND BAR. GROUND ROD SHALL BE COPPER COATED WITH A MINIMUM DIAMETER OF 5/8" AND SHALL BE BURIED A MINIMUM OF FOUR (4) FEET INTO THE GROUND.
11. THE GROUND BAR SHALL BE STAINLESS STEEL, AND SHALL BE ATTACHED USING 3/8 2" X 1/2" SS HEX TAPCON. THE FOLLOWING SHALL BE INSTALLED IN (4) FOUR CENTER HOLES: 10-32SS NUTS, #10 SS WASHERS AND 10-32 X 5 SS PHILLIPS. THE FOURTH HOLE WILL BE A BURNDY KA60 MECHANICAL TERMINAL LUG FOR THE #6 AWG GROUND WIRE. THE ASSEMBLY CAN BE ACQUIRED FROM ERICO INDUSTRIAL SUPPLY (540-353-0083) - CLAMP 9FC-11. THE ENDS OF THE TRACER WIRES SHALL BE PLACED IN THE GROUND BAR AS SHOWN BELOW.
12. IF USING TRACER WIRE ACCESS BOX AS ACCESS POINT, GROUND BAR WILL NOT BE REQUIRED. WIRES SHALL BE CONNECTED AS SHOWN BELOW. TRACER WIRE SHALL BE OF ADEQUATE LENGTH TO EXTEND FIVE (5) FEET ABOVE THE TOP OF ACCESS BOX
13. TWO WRAPS OF TRACER WIRE SHALL BE WRAPPED SNUGGLY AROUND BASE OF HYDRANT. WIRE SHALL NOT BE LEFT IN A WAY THAT WOULD INTERFERE WITH MOWING AROUND HYDRANT.
14. WHEN USING ALL DUCTILE MAIN, TRACER WIRE FOR SERVICES SHALL BE 12 AWG COPPER TRACER WIRE. TRACER WIRE SHALL HAVE BARE WIRE CONTACT TO DUCTILE MAIN.

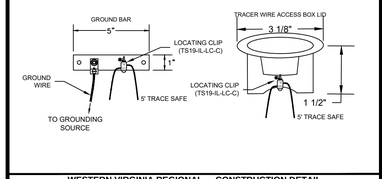

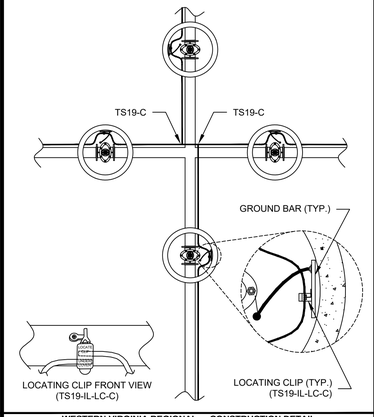

1. BEDDING, HAUNCHING AND INITIAL BACKFILL CONSTRUCTION SHALL BE IN ACCORDANCE WITH THIS DETAIL AND MANUFACTURER'S RECOMMENDATION.
2. ALL PVC PIPE SHALL BE BEDDED IN COMPACTED VDOT #57 OR #68 STONE, OR CRUSHER RUN.
3. IN AREAS SUBJECTED TO VEHICULAR TRAFFIC, BEDDING STONE AND FILL SHALL BE PLACED IN 6" LIFTS FROM BOTTOM OF TRENCH TO 1' ABOVE THE PIPE AND THE REMAINING SHALL BE PLACED IN 10" LIFTS AND SHALL BE COMPACTED TO AT LEAST 90% OF MAXIMUM DENSITY AS DETERMINED BY ASTM D 698.
4. BEDDING REQUIREMENTS FOR DUCTILE IRON WATER LINE ARE DEPENDENT ON MANUFACTURER'S BEDDING CRITERIA.
5. ALL EXCAVATIONS SHALL COMPLY WITH OSHA TECHNICAL MANUAL, CHAPTER 2, TITLED "EXCAVATIONS: HAZARD RECOGNITION IN TRENCHING AND SHORING."
6. THE TRACER WIRE SHALL BE PLACED ALONG THE LOWER QUADRANT OF THE PIPE. THE WIRE SHALL NOT TOUCH THE PIPE, BUT SHALL BE A MAXIMUM OF 6" FROM THE PIPE. NON-METALLIC SPACERS MAY BE USED TO MAINTAIN A SET DISTANCE FROM THE UTILITY.

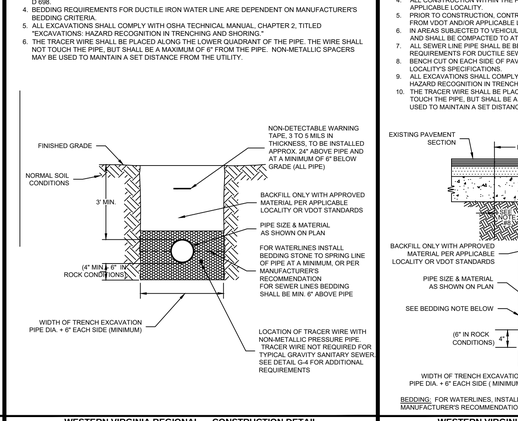

1. BEDDING, HAUNCHING AND INITIAL BACKFILL CONSTRUCTION SHALL BE IN ACCORDANCE WITH THIS DETAIL AND MANUFACTURER'S RECOMMENDATION.
2. ALL PVC PIPE SHALL BE BEDDED IN COMPACTED VDOT #57 OR #68 STONE.
3. IN VDOT ROW, THE CONTRACTOR SHALL FLOWFILL THE TRENCH BELOW PAVEMENT AS REQUIRED AND SPECIFIED BY VDOT. IN ROANOKE CITY, CONTRACTOR SHALL REPLACE PAVEMENT AS REQUIRED BY CITY OF ROANOKE RIGHT OF WAY EXCAVATION AND RESTORATION STANDARDS, LATEST EDITION.
4. ALL CONSTRUCTION WITHIN THE PUBLIC RIGHT-OF-WAY SHALL BE AS SPECIFIED BY VDOT OR APPLICABLE LOCALITY.
5. PRIOR TO CONSTRUCTION, CONTRACTOR IS RESPONSIBLE FOR SECURING ALL REQUIRED PERMITS FROM VDOT AND/OR APPLICABLE LOCALITY.
6. IN AREAS SUBJECTED TO VEHICULAR TRAFFIC, BEDDING STONE AND FILL SHALL BE PLACED IN 6" LIFTS AND SHALL BE COMPACTED TO AT LEAST 95% OF MAXIMUM DENSITY AS DETERMINED BY ASTM D 698.
7. ALL SEWER LINE PIPE SHALL BE BEDDED IN COMPACTED GRANULAR MATERIAL. BEDDING REQUIREMENTS FOR DUCTILE SEWER LINE ARE DEPENDENT ON MANUFACTURER'S BEDDING CRITERIA.
8. BENCH CUT ON EACH SIDE OF PAVEMENT SHALL BE IN ACCORDANCE WITH VDOT OR APPLICABLE LOCALITY'S SPECIFICATIONS.
9. ALL EXCAVATIONS SHALL COMPLY WITH OSHA TECHNICAL MANUAL, CHAPTER 2, TITLED "EXCAVATIONS: HAZARD RECOGNITION IN TRENCHING AND SHORING."
10. THE TRACER WIRE SHALL BE PLACED ALONG THE LOWER QUADRANT OF THE PIPE. THE WIRE SHALL NOT TOUCH THE PIPE, BUT SHALL BE A MAXIMUM OF 6" FROM THE PIPE. NON-METALLIC SPACERS MAY BE USED TO MAINTAIN A SET DISTANCE FROM THE UTILITY.

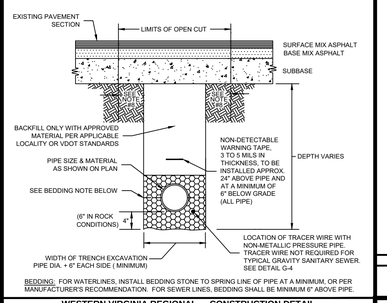

BEDDING: FOR WATERLINES, INSTALL BEDDING STONE TO SPRING LINE OF PIPE AT A MINIMUM, OR PER MANUFACTURER'S RECOMMENDATION. FOR SEWER LINES, BEDDING SHALL BE MINIMUM 6" ABOVE PIPE.

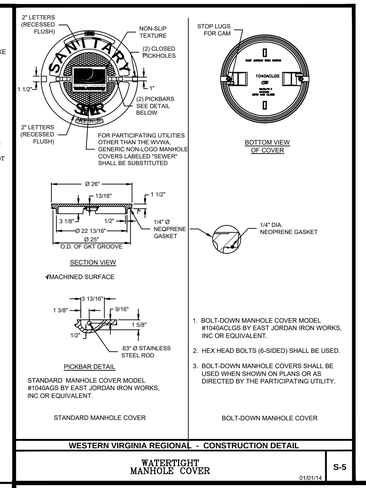

WESTERN VIRGINIA REGIONAL - CONSTRUCTION DETAIL

WATERTIGHT MANHOLE COVER — S-5 — 01/01/14

WESTERN VIRGINIA REGIONAL - CONSTRUCTION DETAIL

TRACER WIRE FOR NON-METALLIC PRESSURE PIPE — G-4 — 09/06/16

1. MATERIALS AND FABRICATION IN ACCORDANCE WITH ASTM C478-09.
2. WHEN USED AS SAMPLING MANHOLE FLOW SHALL PASS STRAIGHT THROUGH, i.e., 180°.
3. STEPS SHALL BE VERTICALLY ALIGNED. FIRST STEP SHALL BE WITHIN 12" OF COVER, BOTTOM STEP SHALL BE WITHIN 24" OF BOTTOM OF MANHOLE.
4. FRAME AND COVER SHALL BE PROPERLY ALIGNED WITH THE 2 FOOT OPENING OF THE MANHOLE STRUCTURE AND BOLTED IN PLACE.
5. FLAT TOP MANHOLES MAY ONLY BE SUBSTITUTED WITH THE PERMISSION OF THE PARTICIPATING UTILITY.
6. FLEXIBLE JOINT MANHOLE CONNECTION SHALL BE AS MANUFACTURED BY PRES-SEAL GASKET CORPORATION OR EQUAL.
7. GROUT ANNULAR SPACE BETWEEN PIPE AND PRECAST MANHOLE ON INSIDE OF MANHOLE.
8. WHEN REPLACING AN EXISTING MANHOLE OR INSTALLING A NEW PRECAST MANHOLE ON AN EXISTING SEWER, A MINIMUM OF SIX FEET (6') OF EXISTING PIPE SHALL BE REMOVED AND REPLACED WITH NEW MATERIAL ON INLET AND OUTLET OF MANHOLE.
9. MANHOLES WHERE THE INVERT IS LOWER THAN THE NORMAL GROUNDWATER ELEVATION (I.E., ALONG CREEKS, RIVERS, LOW-LYING AREAS, ETC.) SHALL HAVE A FULL EXTERIOR COATING AND JOINT WRAP APPLIED IN ADDITION TO JOINT SEALANT. SEE NOTES 10 & 11.
10. IF REQUIRED EXTERIOR VERTICAL WALL SURFACES SHALL BE FACTORY COATED IN ACCORDANCE WITH THE MANUFACTURERS RECOMMENDATION. COATING SHALL BE HIGH BUILD COAL TAR EPOXY MEETING ASTM D1227. COATING SHALL BE APPLIED IN TWO COATS TO A MINIMUM TOTAL THICKNESS OF 16 MILS.
11. IF REQUIRED ALL MANHOLES SHALL UTILIZE AN EXTERNAL FRAME AND JOINT SEAL AT ALL JOINTS AND AT THE FRAME/CHIMNEY/INTERFACE. SEAL SHALL BE MADE OF EPDM RUBBER INACCORDANCE WITH ASTM D412 OR POLYOLEFIN BACKED EXTERIOR JOINT WRAP IN ACCORDANCE WITH ASTM E-1745, C-877, AND C-990. EDM SEAL SHALL HAVE A MINIMUM THICKNESS OF 60 MILS. POLYOLEFIN BACKED EXTERIOR JOINT WRAP SHALL HAVE A BACKING BAND ELEMENT WITH MINIMUM THICKNESS OF 4 MILS. AND BUTYL ROLLER ADHESIVE WITH MINIMUM THICKNESS OF 60 MILS. SEAL SHALL AGGRESSIVELY BOND TO CONCRETE AND METAL STRUCTURES.
12. FOR PIPE LARGER THAN 15 INCHES IN DIAMETER, THE MINIMUM INSIDE DIAMETER OF THE MANHOLE SHALL BE IN ACCORDANCE WITH MANUFACTURERS RECOMMENDATIONS BASED ON PIPE SIZE AND ANGLE BETWEEN INLET AND OUTLET PIPING.
13. 6' MINIMUM DIAMETER MANHOLE SHALL BE REQUIRED WHEN DEPTHS EXCEED 15' UNLESS OTHERWISE APPROVED BY PARTICIPATING UTILITY.

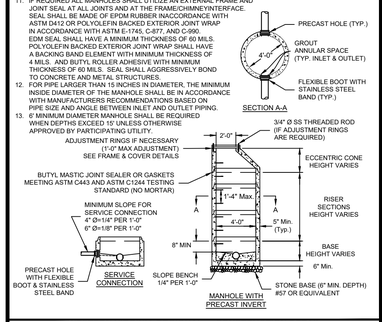

WESTERN VIRGINIA REGIONAL - CONSTRUCTION DETAIL

4' STANDARD MANHOLE FOR PIPE 15" OR SMALLER (FOR DEPTHS UP TO 15 FEET) — S-1 — 08/01/15

WESTERN VIRGINIA REGIONAL - CONSTRUCTION DETAIL

TRACER WIRE FOR NON-METALLIC PRESSURE PIPE — G-4A — 09/06/16

1. TRAFFIC BEARING BOX AND LID REQUIRED IN TRAFFIC AREAS (CAPITOL FOUNDRY VB-9"S).
2. SEWER LATERAL AND CLEANOUT PIPING SHALL BE ASTM D3034 SDR 26. SEWER LATERAL FITTINGS SHALL BE OF SAME SDR RATING AS THE SEWER MAIN. SCHEDULE 40 SOLVENT WELD PIPE AND FITTINGS MAY BE USED FOR THE SEWER LATERAL AND CLEANOUT ASSEMBLY WITH APPROVAL FROM THE PARTICIPATING UTILITY.
3. ALL PIPE SHALL BE OF SAME SIZE.
4. NO BENDS ARE ALLOWED IN THE LATERAL FROM THE MAIN TO THE CLEANOUT STACK WYE. (EXCEPT FOR DEEP SEWER, AS SHOWN BELOW).
5. ALL MAIN LINE TAPS ON ACTIVE MAINS SHALL BE PERFORMED BY PARTICIPATING UTILITY.
6. PIPING ON PRIVATE SIDE OF CLEANOUT TO BE INSTALLED PER GOVERNING JURISDICTION REQUIREMENTS.
7. MINIMUM LATERAL SIZE: 4" FOR RESIDENTIAL SERVICE, 6" FOR NON-RESIDENTIAL SERVICE.
8. SEWER CLEANOUTS SHALL BE SAME SIZE AS SEWER LATERAL.
9. MINIMUM COVER FOR ALL SEWER LATERALS SHALL BE THREE (3') FEET.
10. PROPERTY OWNER RESPONSIBLE FOR INSTALLING CLEANOUT ON PROPERTY LINE (IN ACCORDANCE WITH THIS DETAIL) WHEN MAINTENANCE OCCURS.
11. LOWEST SERVED FINISHED FLOOR ELEVATION SHALL BE A MINIMUM OF THREE FEET (3') ABOVE THE TOP OF THE MAIN AT THE POINT WHERE THE SERVICE LATERAL CONNECTS TO THE MAIN.
12. WHEN CONNECTING TO EXISTING LATERAL USE FERNCO FLEXIBLE COUPLING.

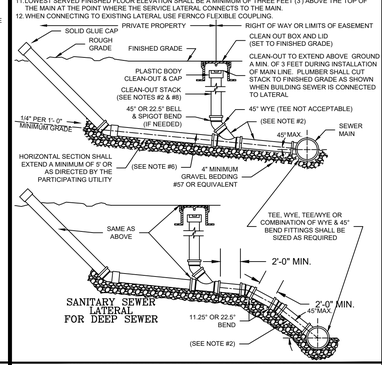

WESTERN VIRGINIA REGIONAL - CONSTRUCTION DETAIL

SANITARY SEWER LATERAL — S-6 — 01/01/14

WESTERN VIRGINIA REGIONAL - CONSTRUCTION DETAIL

BEDDING AND BACKFILL OUTSIDE OF PAVED AREAS — G-11 — 08/01/15

1. WATERTIGHT MANHOLE FRAME MODEL #10452 BY EAST JORDAN IRON WORKS, INC. OR EQUIVALENT.
2. HDPE ADJUSTMENT RINGS SHALL MEET H-20 LOAD RATING, AND SHALL BE INTERLOCKING OR UTILIZE BUTYL MASTIC JOINT SEALANT BETWEEN EACH RING TO FORM A WATERTIGHT JOINT.
3. CONCRETE ADJUSTMENT RINGS SHALL MEET H-20 LOAD RATING AND UTILIZE BUTYL MASTIC JOINT SEALANT BETWEEN EACH RING AND FRAME AN COVER TO FORM A WATERTIGHT JOINT.
4. FRAME HEIGHT SHALL BE 7" FOR BURIED LOCATIONS AND 4" FOR EXPOSED LOCATIONS.

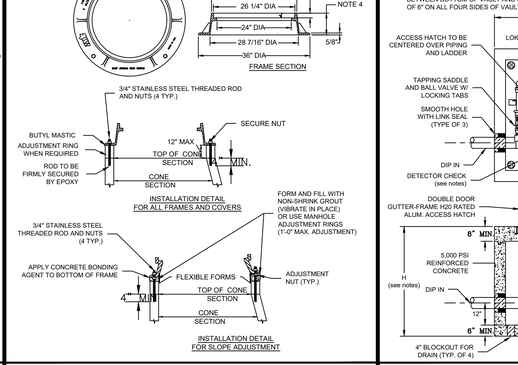

WESTERN VIRGINIA REGIONAL - CONSTRUCTION DETAIL

WATERTIGHT MANHOLE FRAME — S-4 — 01/01/14

WESTERN VIRGINIA REGIONAL - CONSTRUCTION DETAIL

BEDDING AND BACKFILL UNDER PAVEMENT AND IN RIGHT-OF-WAY — G-12 — 08/01/15

1. FOR 6" FIRE LINE, EXTERIOR VAULT DIMENSIONS SHALL BE (L x W x H) 6' X 6' X 5' WITH DOMESTIC TAP MADE INSIDE VAULT AS SHOWN BELOW.
2. FOR 8" FIRE LINE EXTERIOR VAULT DIMENSIONS SHALL BE (L X W X H) 6' X 6' WITH DOMESTIC TAP MADE OUTSIDE VAULT. BALL VALVE WITH LOCKING TABS SHALL BE PROVIDED INSIDE VAULT TO ALLOW FOR ISOLATION OF DOMESTIC METER.
3. SINGLE DETECTOR CHECK VALVE SHALL BE WILKINS 310 DALM , WATTS ES-5507F - BP, OR APPROVED EQUAL WITH FLANGED END CONNECTIONS, BYPASS ASSEMBLY, AND ONE OS&Y GATE VALVE.
4. BYPASS ASSEMBLY SHALL INCLUDE 2 BALL VALVES TO ISOLATE METER.
5. DOMESTIC METER SHALL BE TYPE K COPPER WITH GRIP JOINT FITTINGS, BALL VALVE AT TAPPING SADDLE (WITH LOCKING TABS) AND CHECK VALVE ON OUTLET.
6. DOMESTIC METER AND BYPASS METER TO BE SUPPLIED BY OWNER AND INSTALLED BY VENDOR
7. "UNI FLANGE" ADAPTOR & CAP, FLANGE OR APPROVED EQUAL, OR FLANGED - PLAIN END PIPING REQUIRED FOR INLET AND OUTLET PIPING.
8. VAULT TO BE INSTALLED ON MIN. 6" COMPACTED VDOT #57 STONE WITH FILTER FABRIC PLACED BETWEEN BOTTOM OF VAULT AND STONE BEDDING. FILTER FABRIC TO EXTEND VERTICALLY A MINIMUM OF 6" ON ALL FOUR SIDES OF VAULT.

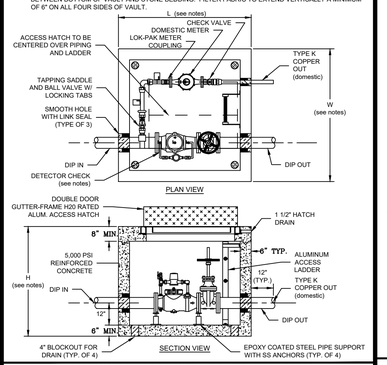

WESTERN VIRGINIA REGIONAL - CONSTRUCTION DETAIL

COMMERCIAL METER VAULT — W-7 — 02/10/15

1. FILTER FABRIC TO BE INSTALLED BETWEEN BOTTOM OF PIPE AND STONE BEDDING. FABRIC TO EXTEND VERTICALLY A MINIMUM OF 6" FROM BOTTOM OF VAULT (FULL CIRCUMFERENCE).

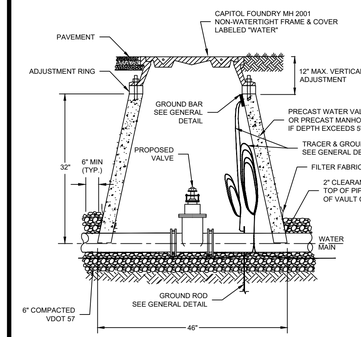

WESTERN VIRGINIA REGIONAL - CONSTRUCTION DETAIL

WATER LINE VALVE & VAULT — W-9 — 01/01/14

1. USE MODERATELY STIFF MIX OF NON SHRINK GROUT, SAND, AND 1/2" AND LESS DIAMETER GRAVEL WITH 28 DAYS, STRENGTH AT MINIMUM 3,000 P.S.I.
2. MIX IS TO BE FORCED INTO ALL GROOVES AND UNDER FLANGE OF FRAME AND LEFT AT OR ABOVE TOP OF FLANGE.
3. DO NOT BACKFILL AROUND FRAME AND COVER, FOR 48 HOURS AFTER CONCRETE IS PLACED. THE USE OF HIGH EARLY STRENGTH CEMENT WOULD REDUCE TIME TO (24 HRS.)
4. RESTRICT TRAFFIC LOAD FOR A MINIMUM OF 24 HOURS.

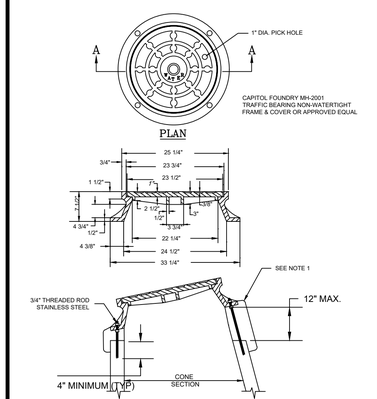

WESTERN VIRGINIA REGIONAL - CONSTRUCTION DETAIL

VAULT FRAME AND COVER — W-16 — 01/01/14

WESTERN VIRGINIA REGIONAL - CONSTRUCTION DETAIL

FIRE HYDRANT ASSEMBLY — W-17 — 02/10/15

1. PUBLIC HYDRANTS SHALL BE PAINTED SILVER WITH AN OIL-BASED PAINT. PRIVATE HYDRANTS SHALL ALSO BE PAINTED SILVER WITH AN OIL-BASED PAINT UNLESS OTHERWISE SPECIFIED BY THE JURISDICTIONAL FIRE MARSHALL.
2. FIRE HYDRANT SHALL BE INSTALLED 2' MIN. AND 4' MAX. FROM BACK OF CURB OR 6' MIN. AND 12' MAX. FROM EDGE OF PAVEMENT WHEN CURB IS NOT PRESENT. FIRE HYDRANT TO BE INSTALLED WITHIN RIGHT-OF-WAY OR EASEMENT LINE.
3. AREA AROUND HYDRANT AT A RADIUS OF 4' TO BE LEVEL AND UNOBSTRUCTED.
4. WATERPROOF BAGS OR OUT OF SERVICE RINGS SHALL BE PLACED OVER ALL NEWLY INSTALLED FIRE HYDRANTS.
5. HYDRANT ASSEMBLIES SHALL BE RODDED AND RESTRAINED WITH APPROVED M.J. GLAND RESTRAINTS. HIGH PRESSURE (OVER 150 PSI) ALSO REQUIRES CONCRETE THRUST BLOCKS AS SHOWN BELOW.
6. IF DURING CONSTRUCTION THE SEASONAL WATER LEVEL IS NOTED TO BE ABOVE THE DRAIN OUTLETS OF THE PROPOSED HYDRANT. THE PARTICIPATING UTILITY WILL BE NOTIFIED IMMEDIATELY SO THAT THE HYDRANT CAN BE RELOCATED TO A SUITABLE LOCATION. OMITTED. OR THE DRAIN HOLE PLUGGED.
7. TWO WRAPS OF TRACER WIRE SHALL BE WRAPPED AROUND BASE OF HYDRANT.
8. APPROVED MODELS - AVK MODEL 2780, AFC MODEL B-84-B-5, MUELLER CENTURION A423, KENNEDY K81D OR EQUIVALENT.
9. WHERE HYDRANT LATERAL(S) IS APPROVED BY THE PARTICIPATING UTILITY TO BE LONGER IN LENGTH, MAKING THE CONTINUOUS SECTION OF PIPE ON EACH SIDE OF THE GATE VALVE UNFEASIBLE, RESTRAINED PIPE JOINTS SHALL BE INSTALLED BETWEEN THE TEE AND GATE VALVE IN LIEU OF RODDING. HOWEVER, A RODDED CONTINUOUS SECTION OF PIPE SHALL ALWAYS BE INSTALLED BETWEEN THE GATE VALVE AND HYDRANT.

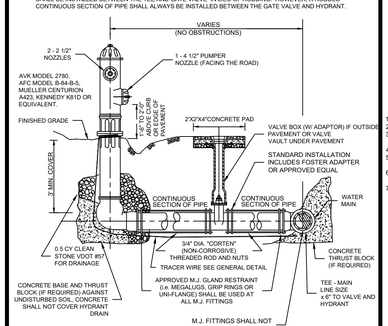

WESTERN VIRGINIA REGIONAL - CONSTRUCTION DETAIL

THRUST BLOCK REQUIREMENTS — W-18 — 02/10/15