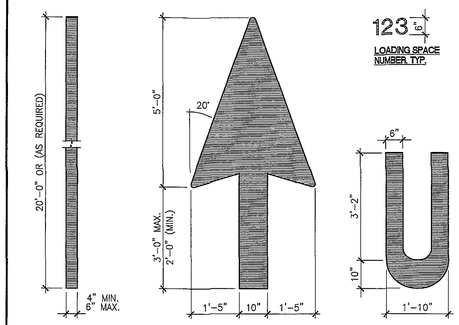

NOTE:

1. USE NON-REFLECTIVE WHITE PAINT, TYP. BUT USE YELLOW PAINT ON CONCRETE OR OTHER SURFACES WHERE WHITE PAINT DOES NOT PROVIDE SUFFICIENT CONTRAST.

Detail: PAVEMENT MARKINGS - TYPICAL PAINTED SIGNAGE | Fac. | Ch. | Sect. | Para. | Detail: G1-2-4f

CAD File: /usps/library/details/G1-2-4f.dwg | Scale: 1/2"=1'-0"

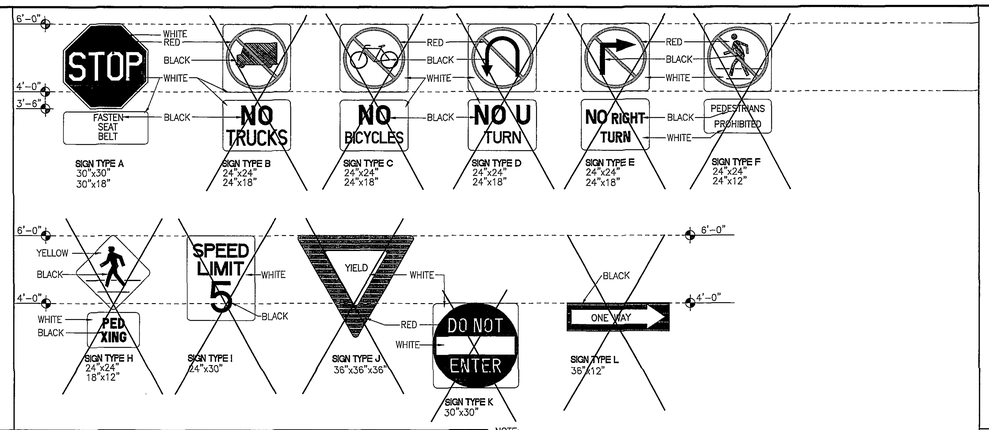

NOTE:

1. FABRICATE ALL SIGN PANELS OF 16 ga. ALUM.
2. POST MOUNT: USE NON-CORROSIVE 3/8" MACHINE BOLTS W/ WASHERS, 2 PER SIGN.
3. WALL MOUNT: USE NON-CORROSIVE 3/8" LAG BOLTS W/ LEAD EXPANSION SHIELDS, 4 PER SIGN.

Detail: TRAFFIC SIGNS - TYPICAL ONE POST CIRCULATION SIGNS | Fac. | Ch. | Sect. | Para. | Detail: G1-2-4d

CAD File: /usps/library/details/G1-2-4d.dwg | Scale: 1/2" = 1'-0"

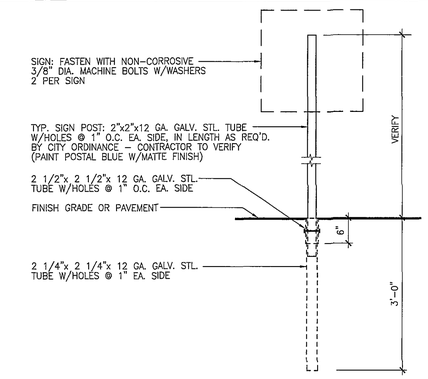

Detail: TRAFFIC SIGNS - TYPICAL TRAFFIC SIGN POST | Fac. | Ch. | Sect. | Para. | Detail: G1-2-4c2

CAD File: /usps/library/details/G1-2-4c2.dwg | Scale: 3/4" = 1'-0"

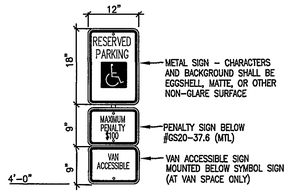

NOTE:

1. FABRICATE SIGN PANELS OF 16 ga. ALUM.
2. USE NON-CORROSIVE 3/8" MACHINE BOLTS W/ WASHERS, 2 PER SIGN.
3. PAINT BACK OF SIGNS BLACK.

HC SIGN

NO SCALE

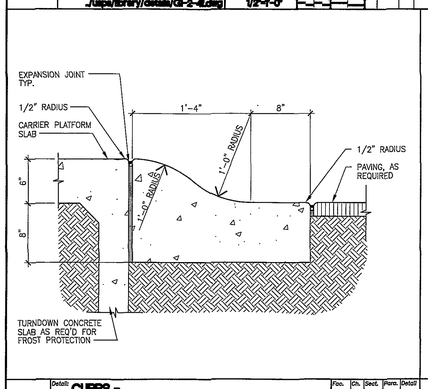

Detail: CURBS - DETAIL • ROLLED CONCRETE CURB | Fac. | Ch. | Sect. | Para. | Detail: G1-2-4a

CAD File: /usps/library/details/G1-2-4a.dwg | Scale: 1-1/2" = 1'-0"

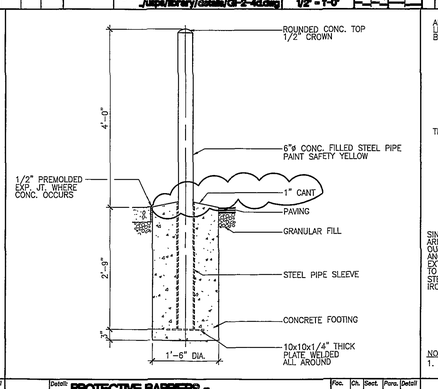

Detail: PROTECTIVE BARRIERS - DETAIL • TYPICAL SITE PIPE BOLLARD | Fac. | Ch. | Sect. | Para. | Detail: G1-2-4g

CAD File: /usps/library/details/G1-2-4g.dwg | Scale: 3/4" = 1'-0"

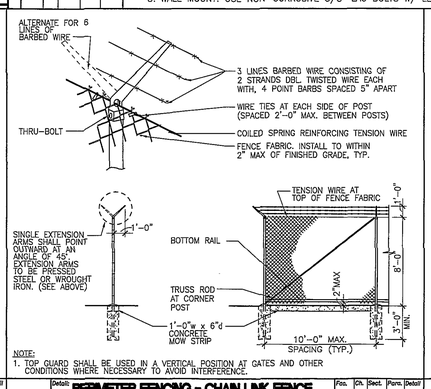

NOTE:

1. TOP GUARD SHALL BE USED IN A VERTICAL POSITION AT GATES AND OTHER CONDITIONS WHERE NECESSARY TO AVOID INTERFERENCE.

Detail: PERIMETER FENCING - CHAIN LINK FENCE AND TOP GUARD WITH MOW STRIP | Fac. | Ch. | Sect. | Para. | Detail: G1-2-7a1

CAD File: /usps/library/details/G1-2-7a1.dwg | Scale: 3/16"=1'-0"

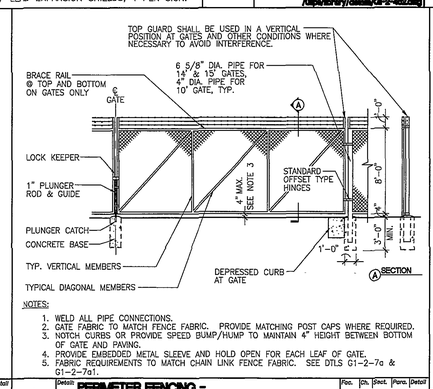

NOTES:

1. WELD ALL PIPE CONNECTIONS.
2. GATE FABRIC TO MATCH FENCE FABRIC. PROVIDE MATCHING POST CAPS WHERE REQUIRED.
3. NOTCH CURBS OR PROVIDE SPEED BUMP/HUMP TO MAINTAIN 4" HEIGHT BETWEEN BOTTOM OF GATE AND PAVING.
4. PROVIDE EMBEDDED METAL SLEEVE AND HOLD OPEN FOR EACH LEAF OF GATE.
5. FABRIC REQUIREMENTS TO MATCH CHAIN LINK FENCE FABRIC. SEE DTLS G1-2-7a & G1-2-7a1.

Detail: PERIMETER FENCING - SWINGING GATE | Fac. | Ch. | Sect. | Para. | Detail: G1-2-7b

CAD File: /usps/library/details/G1-2-7b.dwg | Scale: 3/16"=1'-0"

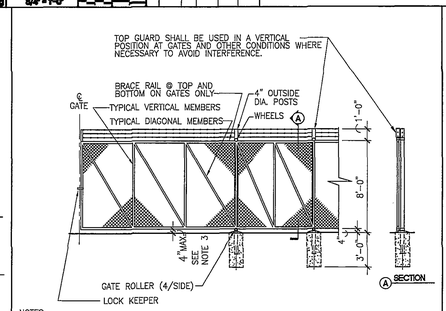

NOTES:

1. WELD ALL PIPE CONNECTIONS.
2. GATE FABRIC TO MATCH FENCE FABRIC. PROVIDE MATCHING POST CAPS WHERE REQUIRED.
3. NOTCH CURBS OR PROVIDE SPEED BUMP/HUMP TO MAINTAIN 4" HEIGHT BETWEEN BOTTOM OF GATE AND PAVING.
4. FABRIC REQUIREMENTS TO MATCH CHAIN LINK FENCE FABRIC. SEE DTLS G1-2-7a & 1-2-7a1.

Detail: PERIMETER FENCING - SLIDING CANTILEVER GATE | Fac. | Ch. | Sect. | Para. | Detail: G1-2-7c

CAD File: /usps/library/details/G1-2-7c.dwg | Scale: 3/16"=1'-0"

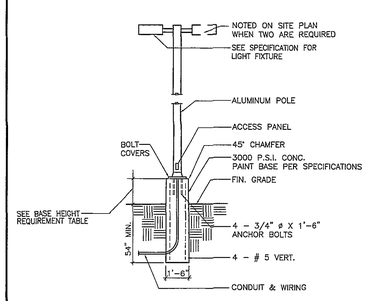

Detail: SITE DESIGN- LIGHT POLE AND BASE DETAIL | Fac. | Ch. | Sect. | Para. | Detail: G1-2-0b

CAD File: /usps/library/details/G1-2-0b.dwg | Scale: N.T.S. | 12/17/2004 | 8/15/2004

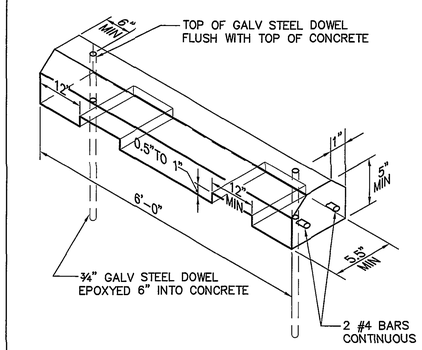

CONC WHEEL STOP

NO SCALE (PRECAST CONCRETE)

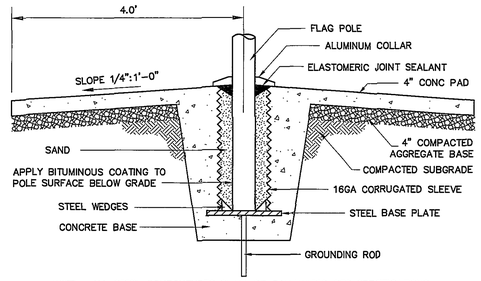

NOTE: ALL STEEL COMPONENETS SHALL BE GALVANIZED PER SPECIFICATIONS.

FLAG POLE BASE DETAIL

NO SCALE

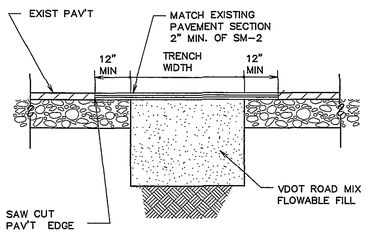

PAVEMENT PATCHING

NO SCALE

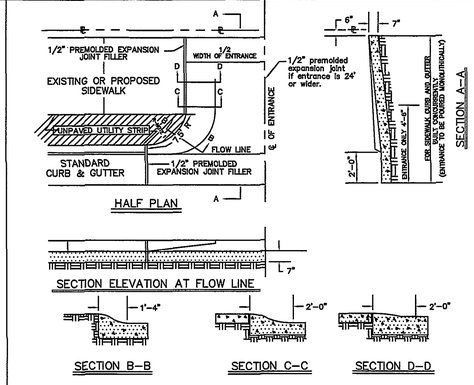

GENERAL NOTES:

1. Standard commercial "Entrance" shall have a minimum curb radius (R) of 7 1/2 feet.
2. Minimum Entrance width to be 12 feet.
3. Where curb & gutter already exists both curb & gutter shall be removed. If proposed entrance falls within five (5) feet of an existing joint removal & reconstruction shall be to that joint. Any concrete removed at other than an existing joint shall be cut with a mechanical saw specifically manufactured for that purpose; this also shall apply to street pavement.
4. Where sidewalk exists or is to be constructed across driveways the thickness thereof must correspond with the thickness of the entrance.
5. Whenever "Entrance" exceeds twenty-four (24) feet in width a 1/2" premolded expansion joint filler shall be installed through the center perpendicular to flow line.
6. Finish "Entrances" shall have a "course broom finish" running parallel to flow line.
7. Curing shall be accomplished by the use of a liquid membrance seal containing white pigment applied at the rate of one (1) gallon per 150 square feet.
8. All "Entrance Ways" shall be constructed according to City of Roanoke specifications and to line and grades approved by the City Engineering Department.
9. Entrances exceeding 30 feet in width shall be approved by the City Manager.

OFFICE OF THE CITY ENGINEER – ROANOKE, VIRGINIA		
APPROVED CITY ENGINEER DATE:	STANDARD CITY OF ROANOKE COMMERCIAL ENTRANCE	SHEET 5 OF 7

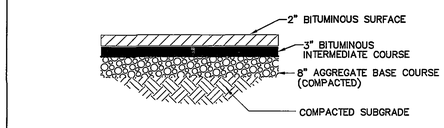

VDOT STD CURB (CG-2)

NO SCALE

PAVEMENT DETAIL

NO SCALE

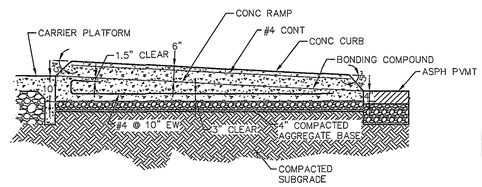

CONCRETE RAMP DETAIL

NO SCALE

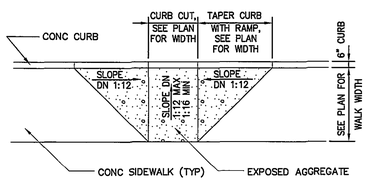

VDOT CG-12 HANDICAP RAMP

NO SCALE

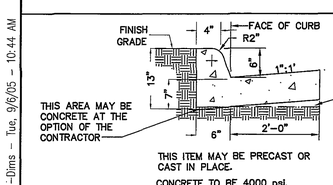

THIS CURB IS TO BE USED WHEN DESIGN SPEED IS 40 MPH OR LESS ON RURAL HIGHWAYS AND 45 MPH OR LESS IN DEVELOPED URBAN & SUBURBAN AREAS.

THE BOTTOM OF THE CURB AND GUTTER MAY BE CONSTRUCTED PARALLEL TO THE SLOPE OF SUBSURFACE COURSES PROVIDED A MINIMUM DEPTH OF 7" IS MAINTAINED

VDOT STD CURB AND GUTTER (CG-6)

NO SCALE

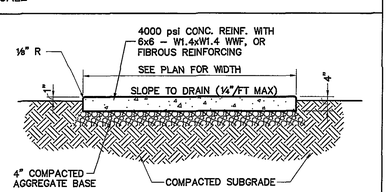

CONCRETE SIDEWALK

NO SCALE

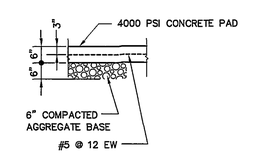

CONC. FILL DETAIL

NO SCALE

BUILDING DESIGN STANDARDS, MSBD 2001, 3/17/2001

© Copyright 1997-2000, United States Postal Service

COMMONWEALTH OF VIRGINIA
TODD D. POFF
CERTIFICATE No. 23870
PROFESSIONAL ENGINEER

Oliver, Webb, Pappas & Rhudy, Inc.
ARCHITECTS ENGINEERS
820 Country Club Drive
Blacksburg, Virginia 24060
Fax: (540) 951-0219
Phone One, Building 2
Tel: (540) 552-2151
e-mail: owpr@owpr.com

ROANOKE CARRIER ANNEX
COURTLAND AVENUE
ROANOKE, VIRGINIA

UNITED STATES POSTAL SERVICE

Facilities Service Office, Street Address, City, State, Zip Code

Revisions:

C1.2 DIMENSIONAL DETAILS

Scale: AS NOTED | Date: 15 JULY 05

Project: A/E 0416

USPS File Number: 362575-02J-0070

Sgloss - 0416-C1-1Dims - Tue, 9/6/05 - 10:44 AM