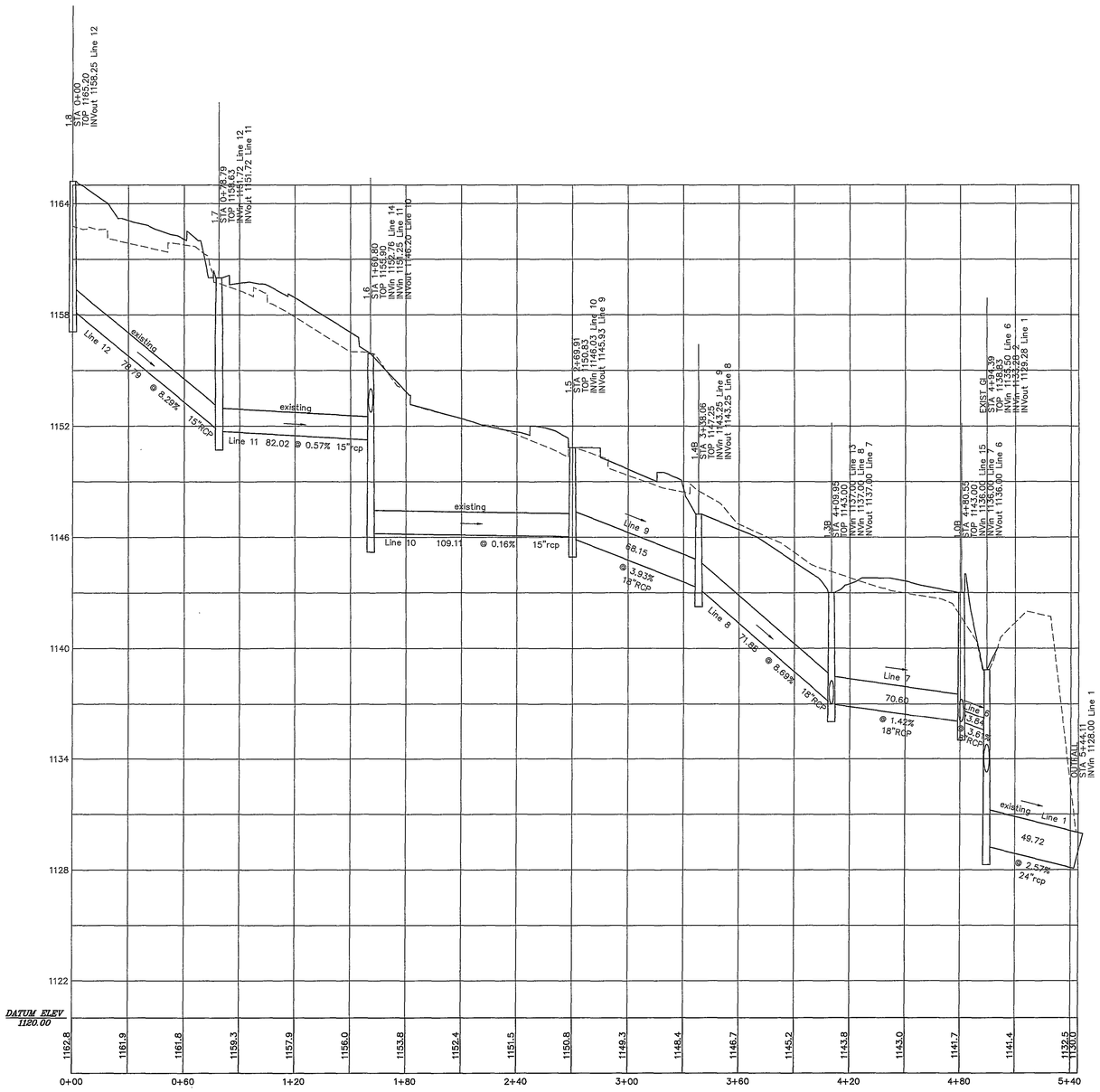

SCALE:
Horiz. 1"=30'
Vert. 1"=3'

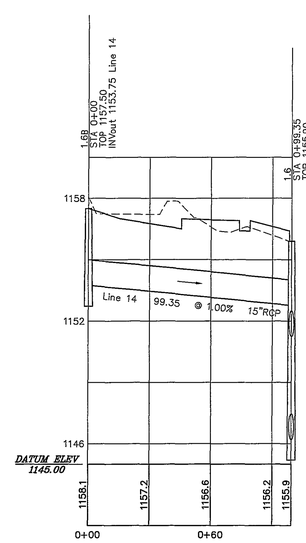

SCALE:
Horiz. 1"=30'
Vert. 1"=3'

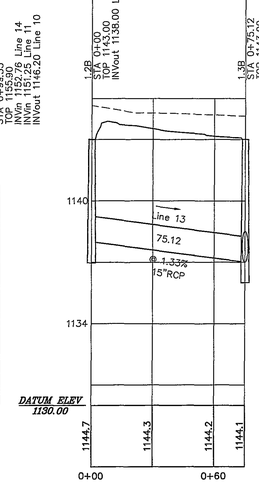

SCALE:
Horiz. 1"=30'
Vert. 1"=3'

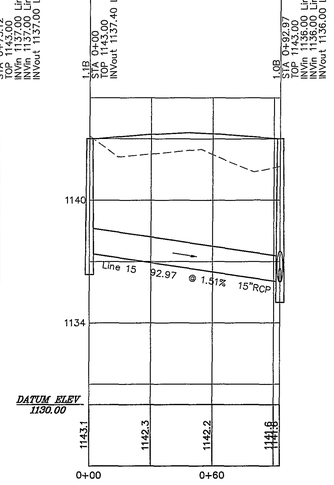

SCALE:
Horiz. 1"=30'
Vert. 1"=3'

LEGEND

EXISTING GROUND SURFACE

PROPOSED GROUND SURFACE

GRAPHIC SCALE

30 0 15 30 60 120

(IN FEET)
1 inch = 30 ft.

APPROVED:

COUNTY ENGINEER DATE

COUNTY PLANNER DATE

KEYPLAN

Draper Aden Associates
Engineering • Surveying • Environmental Services
2206 South Main Street
Blacksburg, VA 24060
540-552-0444 Fax: 540-552-0291
Richmond, VA
Charlottesville, VA
Hampton Roads, VA

COMMONWEALTH OF VIRGINIA
STEVEN P. SOUFER
No. 037043
5/2/06
PROFESSIONAL ENGINEER

PROJECT TITLE

COX COMMUNICATIONS
COX COMMUNICATIONS RENOVATIONS AND ADDITIONS

COX COMMUNICATIONS
ROANOKE COUNTY, VIRGINIA

SFCS
Architecture Engineering Planning Interiors
SFCS Inc. ▪ 305 South Jefferson Street
Roanoke, Virginia 24011.2003
540.344.6664 ▪ Fax 540.343.6925
www.sfcs.com

PROJECT DESIGNER	:
PROJECT ARCHITECT	:
PROJECT ENGINEER	:
DESIGNED BY	: SPS
DRAWN BY	: JGL
CHECKED BY	: CAH

NO.	REVISION DESCRIPTION	DATE
	CONSTRUCTION DRAWING SUBMITTAL	3/14/06
	COUNTY COMMENT REVISIONS	4/06/06
	COUNTY COMMENT REVISIONS	5/01/06

DRAWING TITLE

UTILITY PROFILES

COMM. NO. 5515.00	DATE MARCH 14, 2006
DRAWING C9	SHEET 19 OF 19

MENU

CADD VERSION	2006
PLOT SCALE	
PLOT DATE	May 02, 2006
COMM NO.	
DRAWING NO.	C9

P:\2005\00\05\3305\05326-02\CAD\326-00DES\dwg\05326-02 - SITE PLAN.dwg May 02, 2006 11:46am