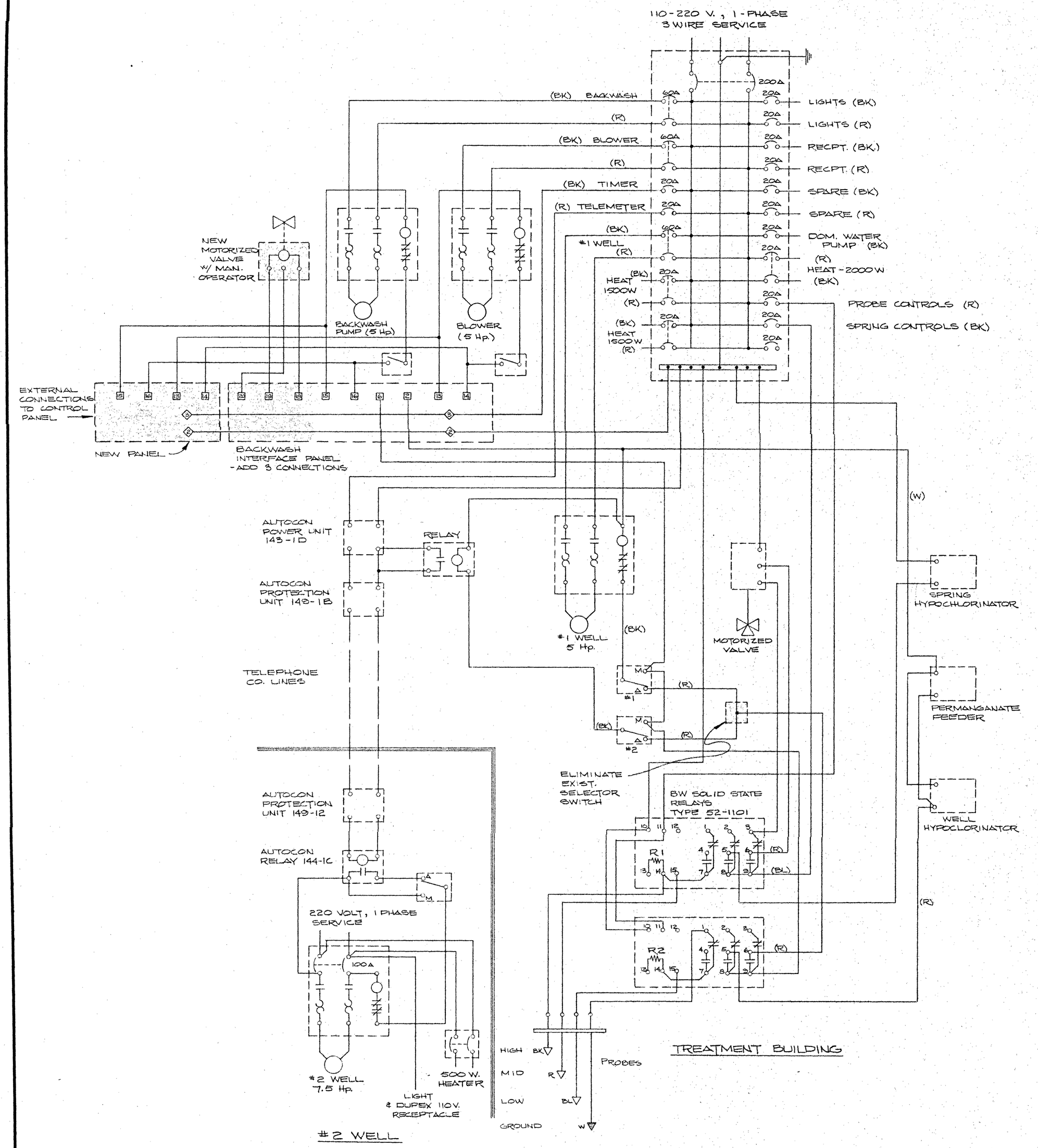


ELECTRICAL SCHEMATIC

BK - BLACK
BL - BLUE
R - RED
W - WHITE

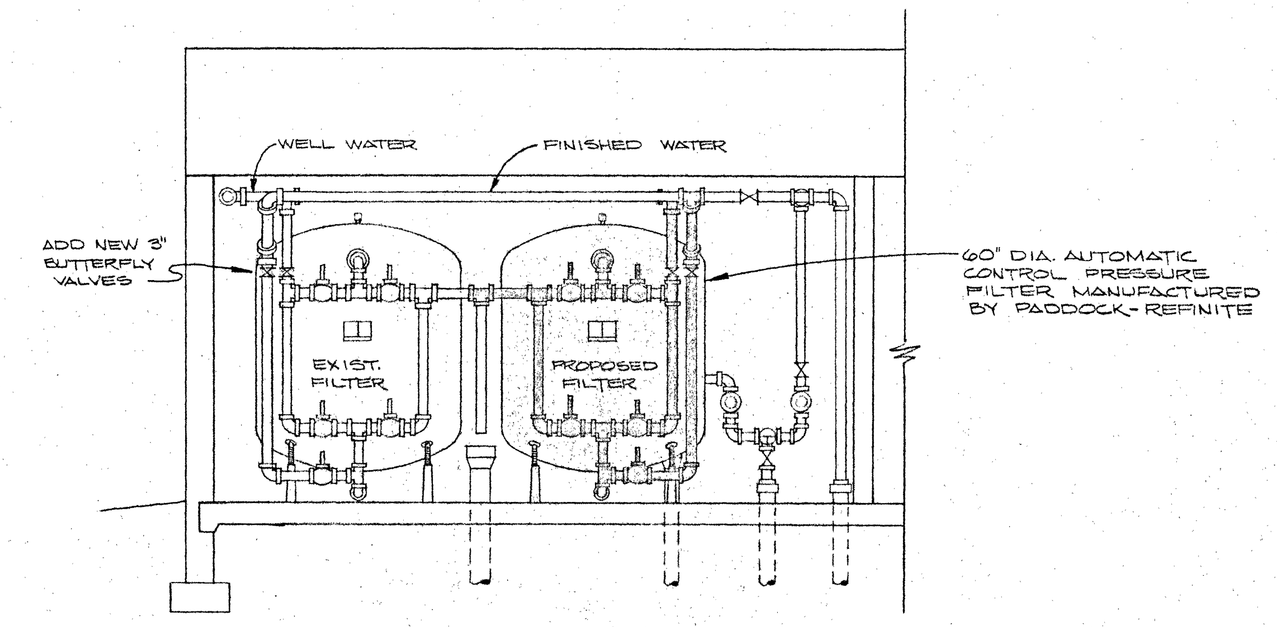


NOTE:
SHADED FACILITIES ARE TO BE ADDED UNDER THIS CONTRACT

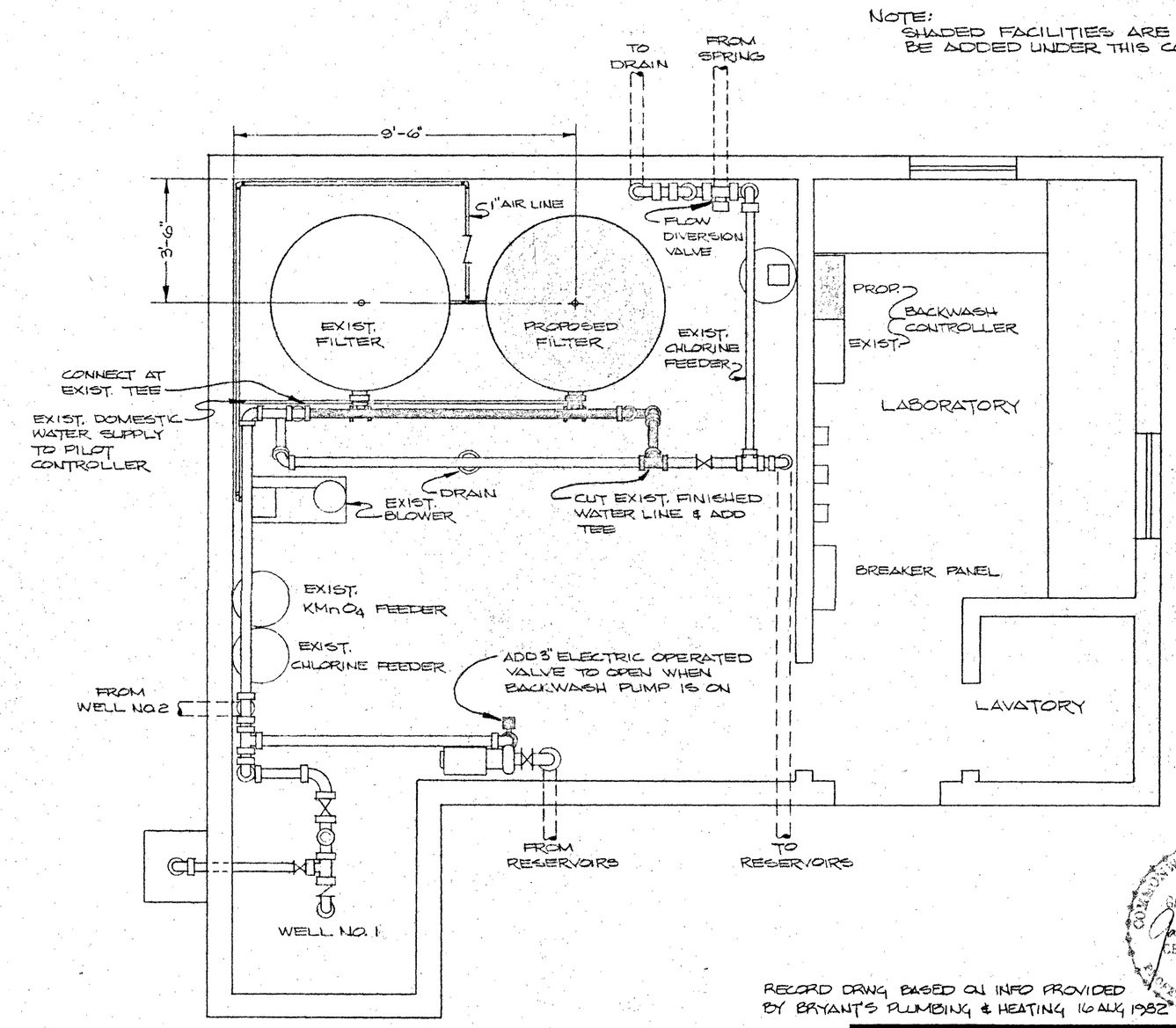


EXISTING TREATMENT BUILDING

SCALE: 3/8" = 1'-0"

RECORD DRWG. BASED ON INFO PROVIDED BY BRYANT'S PLUMBING & HEATING 10 ALY, 1982

COMMONWEALTH OF VIRGINIA
GARY SCOTT CROUCH
CERTIFICATE No 10289
PROFESSIONAL ENGINEER

ANDERSON & ASSOCIATES INC.
CONSULTING ENGINEERS
BLACKSBURG VIRGINIA

# NEW CASTLE WATER SYSTEM IMPROVEMENTS PHASE IV

## PRESSURE FILTER ADDITION

DATE: 30 OCTOBER 1981
SCALE: 3/8" = 1'-0"
DESIGNED: GSC
DRAWN: CWE
CHECKED: SKA

REVISIONS

J.N. 2678

SHEET 4 OF 5