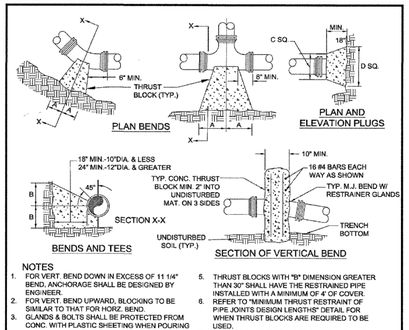

NOTES

1. FOR VERT. BEND DOWN IN EXCESS OF 11 1/4° BEND, ANCHORAGE SHALL BE DESIGNED BY ENGINEER.
2. FOR VERT. BEND UPWARD, BLOCKING TO BE SIMILAR TO THAT FOR HORZ. BEND.
3. GLANDS & BOLTS SHALL BE PROTECTED FROM CONC. WITH PLASTIC SHEETING WHEN POURING THRUST BLOCKS.
4. ALL THRUST BLOCK & SUPPORT CONCRETE SHALL BE 3000 PSI READY MIX CONCRETE.
5. THRUST BLOCKS WITH "B" DIMENSION GREATER THAN 30" SHALL HAVE THE RESTRAINED PIPE INSTALLED WITH A MINIMUM OF 4' OF COVER.
6. REFER TO "MINIMUM THRUST RESTRAINT OF PIPE JOINTS DESIGN LENGTHS" DETAIL FOR WHEN THRUST BLOCKS ARE REQUIRED TO BE USED.
7. WHEN THRUST BLOCK IS REQUIRED BUT NOT FEASIBLE TO CONSTRUCT, THRUST COLLAR SHALL BE USED. SEE "THRUST COLLAR" DETAIL.

PRESSURE = 200psi
BEARING = 2000psf
FACTOR OF SAFETY = 1.5

PIPE SIZE	90° BEND		45° BEND		22 1/2° BEND		11 1/4° BEND		TEE		PLUG	
	A	B	A	B	A	B	A	B	A	B	C	D
4"	8"	12"	8"	8"	6"	6"	6"	8"	11"	9"	10"	8"
6"	18"	12"	8"	10"	6"	8"	8"	8"	11"	10"	12"	18"
8"	18"	13"	10"	10"	8"	8"	8"	8"	11"	12"	12"	24"
10"	20"	16"	12"	14"	8"	12"	8"	12"	14"	16"	16"	30"
12"	20"	16"	12"	14"	8"	12"	8"	12"	14"	16"	16"	30"
16"	26"	20"	16"	18"	11"	13"	11"	13"	18"	20"	20"	36"
24"	82"	42"	62"	30"	44"	22"	22"	16"	82"	42"	82"	42"
30"	185"	42"	100"	42"	52"	42"	40"	30"	185"	42"	185"	42"

WESTERN VIRGINIA REGIONAL - CONSTRUCTION DETAIL

THRUST BLOCK REQUIREMENTS

02/10/15

W-18

FACTOR OF SAFETY = 1.5

PIPE SIZE	PIPE MAT'L	90° BEND	45° BEND	22 1/2° BEND	11 1/4° BEND	VALVE/ PLUG (NOTE 2)	TEE (BRANCH (NOTE 3)	REDUCER (NOTE 4)	45° VERT.	22 1/2° VERT.	11 1/4° VERT.
6"	D.I.	28'	21'	6'	3'	50'	25'	26'	21'	10'	5'
8"	D.I.	36'	21'	8'	4'	65'	41'	27'	27'	13'	7'
10"	D.I.	43'	21'	9'	5'	77'	53'	28'	32'	16'	8'
12"	D.I.	51'	21'	10'	5'	91'	67'	27'	38'	18'	9'
6"	PVC	29'	21'	6'	3'	78'	25'	40'	32'	16'	8'
8"	PVC	37'	21'	8'	4'	102'	49'	43'	42'	21'	10'
10"	PVC	44'	21'	9'	5'	122'	68'	41'	51'	25'	12'
12"	PVC	51'	21'	11'	6'	143'	88'	42'	60'	29'	15'

1. ALL JOINTS SHALL BE RESTRAINED ON BOTH SIDES OF THE FITTING AND DOCUMENTED BY THE INSPECTOR FOR THE LENGTH SHOWN UNLESS OTHERWISE INDICATED.
2. RESTRAINED LENGTH SHOWN REFERS TO ANY DESIGNED OR POTENTIAL LINE STOP, INCLUDING ALL GATE VALVES.
3. RESTRAINED LENGTH SHOWN REFERS TO THE BRANCH LINE ONLY. THE CONTINUOUS PIPE LENGTH OF THE MAIN RUN SHALL BE A MINIMUM OF 10' ON EACH SIDE OF THE TEE.
4. RESTRAINED LENGTH SHOWN IS BASED ON REDUCING PIPE DIAMETER TO ONE SIZE SMALLER THAN PIPE LISTED (ANY OTHER DIAMETER REDUCTION WILL REQUIRE ADDITIONAL CALCULATIONS BEFORE INSTALLATION). RESTRAINED LENGTH SHOWN IS UPSTREAM ON THE LARGE SIDE OF THE REDUCER.
5. 12" AND SMALLER DIAMETER: IF UNDER 150 PSI WORKING PRESSURE, RESTRAINED JOINT(S) ARE TO BE USED. IF EQUAL TO OR OVER 150 PSI WORKING PRESSURE, BOTH THRUST BLOCK(S) AND RESTRAINED JOINT(S) SHALL BE USED.

   LARGER THAN 12" DIAMETER: IF UNDER 100 PSI WORKING PRESSURE, RESTRAINED JOINT(S) ARE TO BE USED. IF EQUAL TO OR OVER 100 PSI WORKING PRESSURE, BOTH THRUST BLOCK(S) AND RESTRAINED JOINT(S) SHALL BE USED (UNLESS OTHERWISE APPROVED BY THE PARTICIPATING UTILITY).
6. FOR RESTRAINED JOINT PIPING REQUIREMENTS AT FITTING R.J. PVC AND R.J. DIP MAY BE USED INTERCHANGEABLY WITH APPROVAL FROM PARTICIPATING UTILITY. CONTRACTOR MUST PLAN ACCORDINGLY FOR THE DIFFERENCE IN PVC AND DIP BELL AND SPIGOT DIMENSIONS.

WESTERN VIRGINIA REGIONAL - CONSTRUCTION DETAIL

MINIMUM THRUST RESTRAINT OF PIPE JOINTS DESIGN LENGTHS

02/10/15

W-19

1. TAPPING SLEEVE SHALL BE POWERSEAL MODEL 3490 TYPE 304 STAINLESS STEEL WITH CARBON STEEL FLANGE, ROMACS MODEL SST III, FORD MODEL FTSS WITH CARBON STEEL FLANGE OR APPROVED EQUIVALENT. SLEEVE SHALL BE RATED AT 100 PSI OVER WORKING PRESSURE AND MUST HAVE A TEST PLUG.
2. TAPPING VALVE SHALL BE AVK RESILIENT SEATED GATE VALVE SERIES 25 MJ/FL, MUELLER T-2360 RESILIENT WEDGE TAPPING VALVE WITH MJ/FL, OR AFC SERIES 2500 RESILIENT WEDGE TAPPING VALVE WITH MJ/FL. VALVE SHALL BE RATED AT 250 PSI.
3. TAPPING SLEEVE AND VALVE SHALL BE FULL PORT TO ACCEPT FULL SIZE SHELL CUTTER.
4. STEEL FLANGE SHALL MEET AWWA C207.
5. SIZE-ON-SIZE TAPPING NOT ALLOWED UNLESS APPROVED BY PARTICIPATING UTILITY.

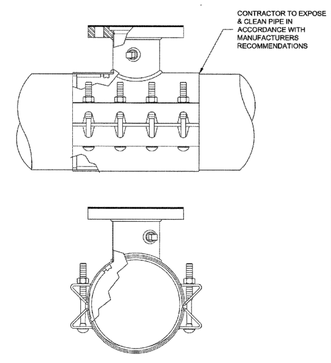

WESTERN VIRGINIA REGIONAL - CONSTRUCTION DETAIL

TAPPING SLEEVE AND VALVE

01/01/14

W-21

INSTALLATION OF DUCTILE IRON WATER MAINS
TABLE 3 AWWA C600-05
Maximum Joint Deflection Full Length of Pipe - Push on Type Joint

	Maximum Offset - S* (Inches)		Approximate Radius of Curve - R* Produced by Succession of Joints	
Nominal Pipe Size (Inches)	Deflection Angle - θ (degree)	Joint Length 18-Feet	Joint Length 20-Feet	Joint Length 18-Feet	Joint Length 20-Feet
3	5°	19	21	205	230
4	5°	19	21	205	230
6	5°	19	21	205	230
8	5°	19	21	205	230
10	5°	19	21	205	230
12	5°	19	21	205	230
14	3°	11	12	340	380
16	3°	11	12	340	380
18	3°	11	12	340	380
20	3°	11	12	340	380
24	3°	11	12	340	380
30	3°	11	12	340	380

* SEE FIGURE 4.
For 14-inch and larger push-on joints, maximum deflection angle may be larger than shown above. Consult the manufacturer.

INSTALLATION OF DUCTILE IRON WATER MAINS
TABLE 4 AWWA C600-05
Maximum Joint Deflection Full Length of Pipe - Mechanical Joint Pipe

	Maximum Offset - S* (Inches)		Approximate Radius of Curve - R* Produced by Succession of Joints	
Nominal Pipe Size (Inches)	Deflection Angle - θ (degree)	Joint Length 18-Feet	Joint Length 20-Feet	Joint Length 18-Feet	Joint Length 20-feet
3	8°-18"	31	35	125	140
4	8°-18"	31	35	125	140
6	7°-07"	27	30	145	160
8	5°-21"	20	22	195	220
10	5°-21"	20	22	195	220
12	5°-21"	20	22	195	220
14	3°-35"	13.5	15	285	320
16	3°-35"	13.5	15	285	320
18	3°-00"	11	12	340	380
20	3°-00"	11	12	340	380
24	2°-23"	9	10	450	500

* SEE FIGURE 4.

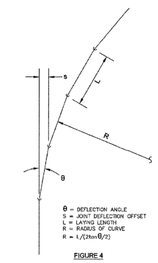

FIGURE 4

WESTERN VIRGINIA REGIONAL - CONSTRUCTION DETAIL

DUCTILE IRON PIPE DEFLECTION ALLOWANCE TABLES

01/01/14

W-22

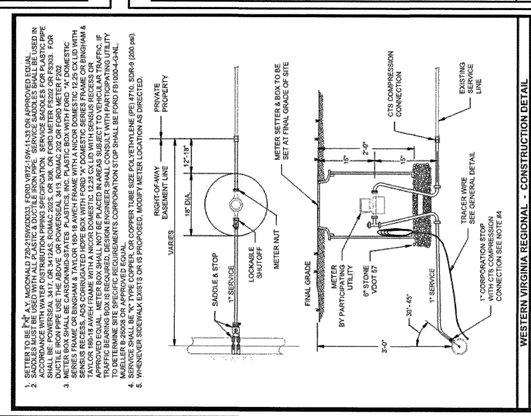

1. SETTER IS USE FOR A.Y. McDONALD 705-210W0D01, FORD W972-1-1W-1-NQ OR APPROVED EQUAL.
2. SADDLE MUST BE USED WITH ALL PLASTIC & DUCTILE IRON PIPE. SERVICE SADDLES SHALL BE USED IN ACCORDANCE WITH WATER DISTRIBUTION PIPING SPECIFICATION. SERVICE SADDLES FOR PLASTIC PIPE SHALL BE POWERSEAL 3411 OR 3415 OR ROMAC 202 OR FORD W1-202 OR FORD W1-202-PS. FOR DUCTILE IRON PIPE USE THE ABOVE OR POWERSEAL 3415 OR ROMAC 202 OR FORD METER F-202.
3. METER SETTER SHALL BE CONSTRUCTED OF PLASTIC. SETTER SHALL BE A MINIMUM OF DOMESTIC SERIES FRAME OR BINGHAM & TAYLOR 193-18 AWSH FRAME WITH A NICOR DOMESTIC 12.25 CID LID WITH SERVICE RESERS. ACS CORRUGATED HDPE BOX WITH FORD "K" DOMESTIC SERIES FRAME OR BINGHAM & TAYLOR 193-18 AWSH FRAME WITH A NICOR DOMESTIC 12.25 CID LID WITH SERVICE RESERS. APPROVED EQUAL. METER BOX SHALL NOT BE PLACED IN AREAS SUBJECT TO VEHICULAR TRAFFIC. IF PLACED IN AREAS SUBJECT TO VEHICULAR TRAFFIC, METER BOXES SHALL BE INSTALLED AS DIRECTED BY THE PARTICIPATING UTILITY. CONTRACTOR SHALL CONSULT WITH PARTICIPATING UTILITY TO DETERMINE SITE SPECIFIC REQUIREMENTS. CORPORATION STOP SHALL BE FORD F91002-4-QNL.
4. SERVICE SHALL BE "K" TYPE COPPER, OR COPPER TUBE SIZE POLYETHYLENE (PE) 4710, SDR-9 (200 psi).
5. WHENEVER SIDEWALK EXISTS OR IS PROPOSED, MODIFY METER LOCATION AS DIRECTED.

WESTERN VIRGINIA REGIONAL - CONSTRUCTION DETAIL

SINGLE RESIDENTIAL WATER SERVICE (REPLACEMENT OF EXISTING SERVICE)

05/05/11

W-2

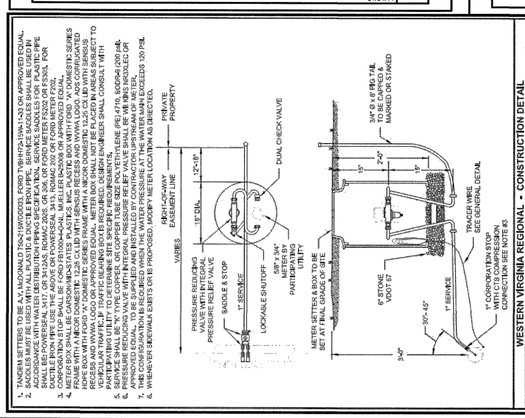

1. TANDEM SETTERS TO BE A.Y. McDONALD 705-210W0D02, FORD T1B-H1F2-1W-1-NQ OR APPROVED EQUAL.
2. SADDLES MUST BE USED WITH ALL PLASTIC & DUCTILE IRON PIPE. SERVICE SADDLES SHALL BE USED IN ACCORDANCE WITH WATER DISTRIBUTION PIPING SPECIFICATION. SERVICE SADDLES FOR PLASTIC PIPE SHALL BE POWERSEAL 3411 OR 3415, ROMAC 202S, OR 20A, OR FORD METER FS202 OR FS202L. FOR DUCTILE IRON PIPE USE THE ABOVE OR POWERSEAL 3415, ROMAC 202 OR FORD METER FS202.
3. CORPORATION STOP SHALL BE FORD F91002-4-QNL, MUELLER B-25008 OR APPROVED EQUAL.
4. METER BOX SHALL BE CARSON NB-24TES (PLASTIC), ACS PLASTIC BOX WITH FORD "K" DOMESTIC SERIES FRAME OR BINGHAM & TAYLOR 193-18 AWSH FRAME WITH A NICOR DOMESTIC 12.25 CID LID WITH SERVICE RESERS. ACS CORRUGATED HDPE BOX WITH FORD "K" DOMESTIC SERIES FRAME WITH A NICOR DOMESTIC 12.25 CID LID WITH SERVICE RESERS. APPROVED EQUAL. METER BOX SHALL NOT BE PLACED IN AREAS SUBJECT TO VEHICULAR TRAFFIC. IF PLACED IN AREAS SUBJECT TO VEHICULAR TRAFFIC, METER BOXES SHALL BE INSTALLED AS DIRECTED BY THE PARTICIPATING UTILITY. CONTRACTOR SHALL CONSULT WITH PARTICIPATING UTILITY TO DETERMINE SITE SPECIFIC REQUIREMENTS.
5. SERVICE SHALL BE "K" TYPE COPPER, OR COPPER TUBE SIZE POLYETHYLENE (PE) 4710, SDR-9 (200 psi).
6. PRESSURE REDUCING VALVE WITH INTERNAL PRESSURE RELIEF VALVE SHALL BE WILKINS 950XL2 OR APPROVED EQUAL. PRESSURE RELIEF VALVE SHALL BE SET AT 150 PSI OUTLET PRESSURE.
7. THIS CONFIGURATION IS REQUIRED WHEN THE WATER PRESSURE AT THE WATER MAIN EXCEEDS 120 PSI.
8. WHENEVER SIDEWALK EXISTS OR IS PROPOSED, MODIFY METER LOCATION AS DIRECTED.

WESTERN VIRGINIA REGIONAL - CONSTRUCTION DETAIL

SINGLE RESIDENTIAL WATER SERVICE FOR HIGH PRESSURE (LINE PRESSURE EXCEEDS 120 PSI)

09/07/17

W-3

CONTRACTOR LICENSE OF VIRGINIA
BRADLEY C. CRAIG
Lic. No. 023879
REGISTERED PROFESSIONAL ENGINEER

Revisions	Date

Issue Date: OCT. 31 2017
Drawn By: DBL
Designed By: DBL
Checked By: BCC
Date: 2/28/17

Mattern & Craig
ENGINEERS•SURVEYORS
701 FIRST STREET, S.W.
ROANOKE, VIRGINIA 24016
(540) 345-3672
FAX (540) 345-7691

DOVER DR./ KIPLING ST. WATERLINE REPLACEMENT PROJECT

DETAILS

ROANOKE, VIRGINIA

Vertical Scale:

Horizontal Scale:

Commission Number: 3770

Sheet No.: 9