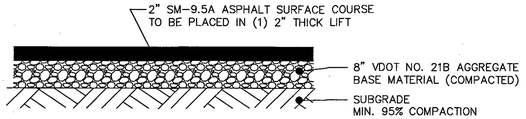

PAVEMENT SECTION

N.T.S.

NOTE:
1. G.C. SHALL BE RESPONSIBLE FOR OBTAINING ADEQUATE SUB-GRADE COMPACTION PRIOR TO PAVEMENT CONSTRUCTION.

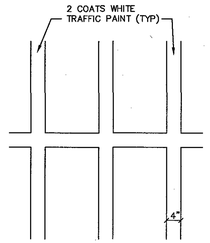

NOTE: SEE SITE PLAN FOR LAYOUT OF PARKING LOT STRIPING.

PAVEMENT STRIPING DETAIL

N.T.S.

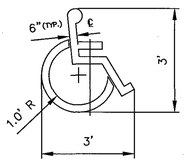

ACCESSIBLE PARKING SYMBOL

LOCATE AT EDGE OF PARKING SPACE UNLESS ACCOMPANIED BY "VAN" LETTERING

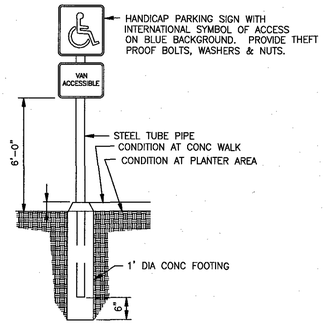

HANDICAP SIGNPOST DETAIL

NO SCALE

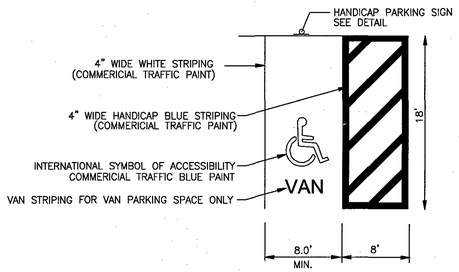

H.C. STALL STRIPING DETAIL

N.T.S.

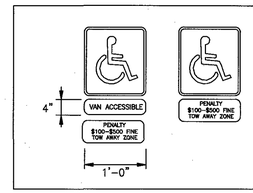

HANDICAP SIGN NOTES:
1. THE PROPOSED SIGNAGE SHALL BE INSTALLED PER ADA STANDARDS.
2. ALL SIGNS SHALL BE REFLECTORIZED
3. ALL SIGNS SHALL BE SECURELY MOUNTED TO A METAL SIGN POST. THE POST SHALL BE EMBEDDED IN CONCRETE AT THE BASE TO ENSURE STABILITY.
4. ALL HANDICAP PARKING SPACE SIGNS SHALL HAVE THE BOTTOM EDGE OF THE SIGN NO LOWER THAN FOUR FEET NOR HIGHER THAN SEVEN FEET ABOVE THE PARKING SURFACE.

HANDICAP SIGN DETAIL

NO SCALE

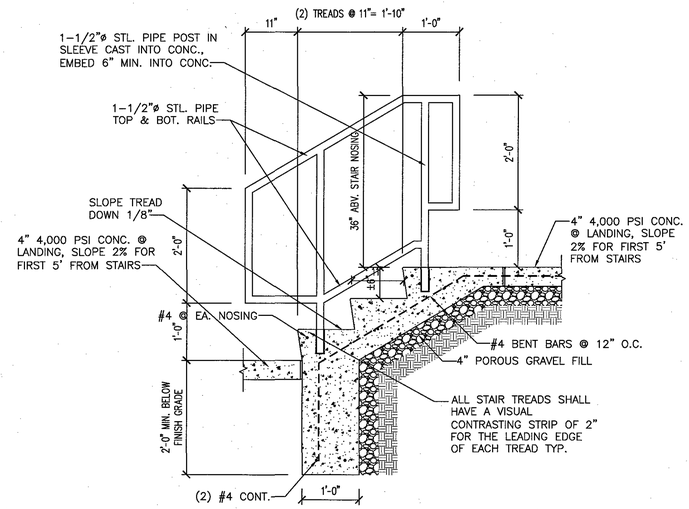

EXTERIOR STEPS SECTION

N.T.S.

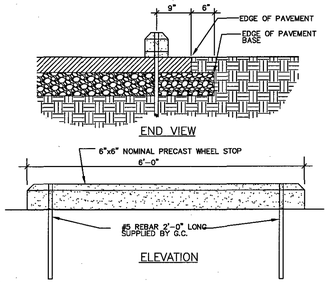

CONCRETE BUMPER BLOCK DETAIL

NO SCALE

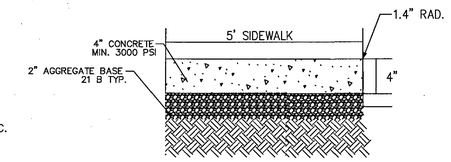

NOTE:
FINISH – TROWELED EDGES, BROOM FINISH SCORING EVERY 6'
EXPANSION JOINTS EVERY 30' MIN.

G.C. SHALL BE RESPONSIBLE FOR OBTAINING ADEQUATE SUB-GRADE COMPACTION.

SIDEWALK DETAIL

N.T.S.

PROFILE SCALES:

(HORIZONTAL)

50 0 50 100 150

SCALE: 1" = 50'

(VERTICAL)

10 0 10 20 30

SCALE: 1" = 10'

PROPOSED FORCE MAIN PROFILE 1

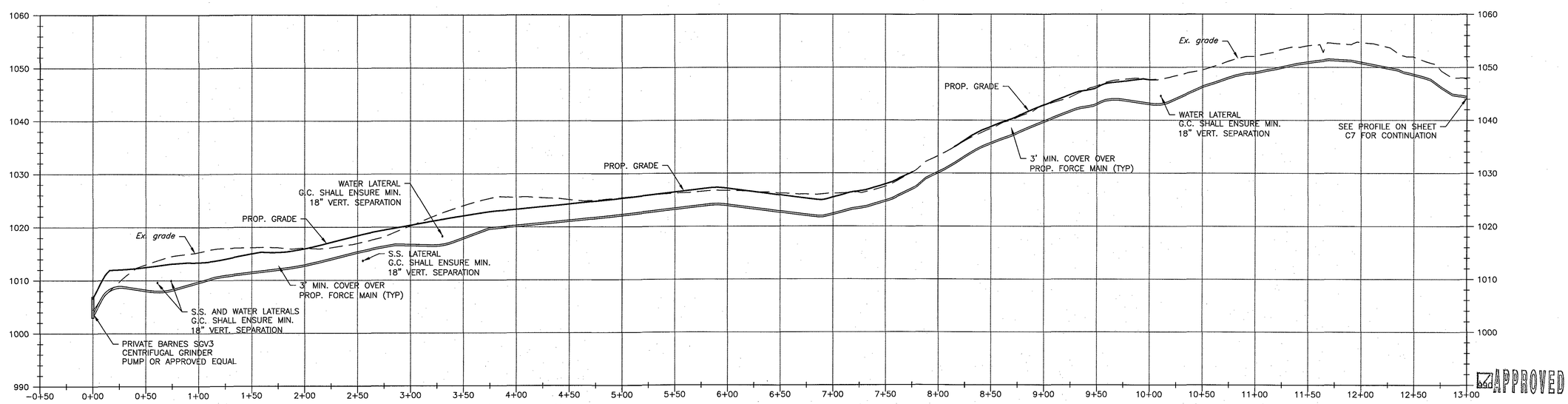

BALZER AND ASSOCIATES INC
REFLECTING TOMORROW
www.balzer.cc
Roanoke
New River Valley
Richmond
Staunton
Harrisonburg
RESIDENTIAL LAND DEVELOPMENT ENGINEERING
SITE DEVELOPMENT ENGINEERING
LAND USE PLANNING & ZONING
LANDSCAPE ARCHITECTURE
LAND SURVEYING
ARCHITECTURE
STRUCTURAL ENGINEERING
TRANSPORTATION ENGINEERING
ENVIRONMENTAL & SOIL SCIENCE
WETLAND DELINEATIONS & STREAM EVALUATIONS

Balzer and Associates, Inc.
1208 Corporate Circle
Roanoke, VA 24018
540-772-9580
FAX 540-772-8050

COMMONWEALTH OF VIRGINIA
CHRISTOPHER P. BURNS
Lic. No.047338
7/6/18
PROFESSIONAL ENGINEER

DON'S CAB-INNS CAMPGROUND

EXPLORE PARK

FORCE MAIN PROFILE & SITE DETAILS

VINTON DISTRICT
ROANOKE COUNTY, VIRGINIA

DRAWN BY	EJP
DESIGNED BY	CPB
CHECKED BY	CPB
DATE	3/26/2018
SCALE	AS NOTED

REVISIONS:
5/3/2018
5/10/2018
7/6/2018

SHEET NO.
C6

JOB NO. 04180005.00