1. SETTER TO BE A.Y. McDONALD 720-215WXDD33, FORD VB72-15W-11-33 OR APPROVED EQUAL.
2. SADDLES MUST BE USED WITH ALL PLASTIC & DUCTILE IRON PIPE. SERVICE SADDLES SHALL BE USED IN ACCORDANCE WITH WATER DISTRIBUTION PIPING SPECIFICATION. SERVICE SADDLES FOR PLASTIC PIPE SHALL BE: POWERSEAL 3417, OR 3412AS, ROMAC 202S, OR 306, OR FORD METER FS202 OR FS303. FOR DUCTILE IRON PIPE USE THE ABOVE OR POWERSEAL 3413, ROMAC 202 OR FORD METER F202.
3. METER BOX SHALL BE CARSON/MID-STATES PLASTICS, INC. PLASTIC BOX WITH FORD A32-T (ELECTRONIC READ LID), ADS CORRUGATED HDPE BOX WITH FORD A32-T (ELECTRONIC READ LID), OR A. Y. McDONALD MODEL 74M32AT CAST IRON BASE & COVER OR APPROVED EQUAL. METER BOX SHALL NOT BE PLACED IN AREAS SUBJECT TO VEHICULAR TRAFFIC. IF TRAFFIC BEARING BOX IS REQUIRED, DESIGN ENGINEER SHALL CONSULT WITH PARTICIPATING UTILITY TO DETERMINE SITE SPECIFIC REQUIREMENTS.
4. CORPORATION STOP SHALL BE FORD FB1000-4-G-NL, MUELLER B-25008 OR APPROVED EQUAL.
5. SERVICE SHALL BE "K" TYPE COPPER, OR COPPER TUBE SIZE POLYETHYLENE (PE) 4710, SODR-9 (200 psi).
6. WHENEVER SIDEWALK EXISTS OR IS PROPOSED, MODIFY METER LOCATION AS DIRECTED.

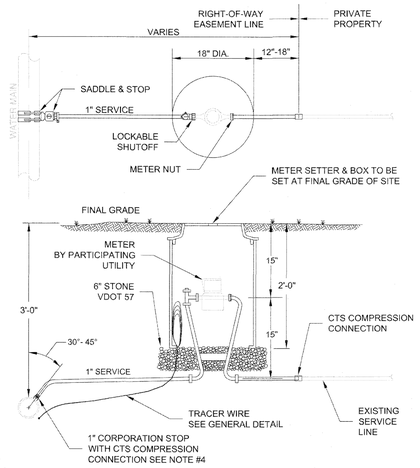

WESTERN VIRGINIA REGIONAL - CONSTRUCTION DETAIL

SINGLE RESIDENTIAL WATER SERVICE (REPLACEMENT OF EXISTING SERVICE) — 02/10/15 — **W-2**

1. SETTER TO BE A.Y. McDONALD 20-215 WDDD33, FORD VBHH72-15W-11-33 OR APPROVED EQUAL.
2. SADDLES MUST BE USED WITH ALL PLASTIC DUCTILE IRON PIPE. SERVICE SADDLES SHALL BE USED IN ACCORDANCE WITH WATER DISTRIBUTION PIPING SPECIFICATION. SERVICE SADDLES FOR PLASTIC PIPE SHALL BE POWERSEAL 3417, OR 3412AS, ROMAC 202S, OR 306, OR FORD METER FS202 OR FS303. FOR DUCTILE IRON PIPE USE THE ABOVE OR POWERSEAL 3413, ROMAC 202 OR FORD METER F202.
3. METER BOX SHALL BE CARSON/MID-STATES PLASTICS, INC. PLASTIC BOX WITH FORD A32-T (ELECTRONIC READ LID), ADS CORRUGATED HDPE BOX WITH FORD A32-T (ELECTRONIC READ LID), OR A. Y. McDONALD MODEL 74M32AT CAST IRON BASE & COVER OR APPROVED EQUAL. USE OF TRAFFIC BEARING BOX SHALL BE APPROVED BY THE AUTHORITY. METER BOX SHALL NOT BE PLACED IN AREAS SUBJECT TO VEHICULAR TRAFFIC. IF TRAFFIC BEARING BOX IS REQUIRED, DESIGN ENGINEER SHALL CONSULT WITH PARTICIPATING UTILITY TO DETERMINE SITE SPECIFIC REQUIREMENTS.
4. WHENEVER SIDEWALK EXISTS OR IS PROPOSED, MODIFY METER LOCATION AS DIRECTED.
5. CORPORATION STOP SHALL BE FORD F1000-4-G OR APPROVED EQUAL.
6. SERVICE SHALL BE "K" TYPE COPPER, OR COPPER TUBE SIZE POLYETHYLENE (PE) 4710, SODR-9 (200 psi).

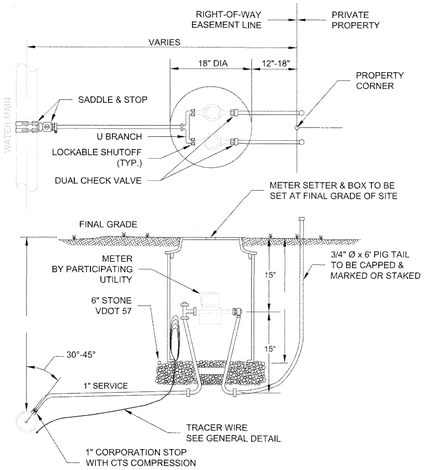

WESTERN VIRGINIA REGIONAL - CONSTRUCTION DETAIL

DOUBLE RESIDENTIAL WATER SERVICE (LINE PRESSURE UNDER120 PSI) — 01/01/14 — **W-4**

1. SETTER TO BE A.Y. McDONALD 720-215 WXDD33, FORD VB72-15W-11-33 OR APPROVED EQUAL.
2. SADDLES MUST BE USED WITH ALL PLASTIC DUCTILE IRON PIPE. SERVICE SADDLES SHALL BE USED IN ACCORDANCE WITH WATER DISTRIBUTION PIPING SPECIFICATION. SERVICE SADDLES FOR PLASTIC PIPE SHALL BE POWERSEAL 3417, OR 3412AS, ROMAC 202S, OR 306, OR FORD METER FS202 OR FS303. FOR DUCTILE IRON PIPE USE THE ABOVE OR POWERSEAL 3413, ROMAC 202 OR FORD METER F202.
3. METER BOX SHALL BE CARSON/MID-STATES PLASTICS, INC. PLASTIC BOX WITH FORD A32-T (ELECTRONIC READ LID), ADS CORRUGATED HDPE BOX WITH FORD A32-T (ELECTRONIC READ LID), OR A. Y. McDONALD MODEL 74M32AT CAST IRON BASE & COVER OR APPROVED EQUAL. USE OF TRAFFIC BEARING BOX SHALL BE APPROVED BY THE AUTHORITY. METER BOX SHALL NOT BE PLACED IN AREAS SUBJECT TO VEHICULAR TRAFFIC. IF TRAFFIC BEARING BOX IS REQUIRED, DESIGN ENGINEER SHALL CONSULT WITH PARTICIPATING UTILITY TO DETERMINE SITE SPECIFIC REQUIREMENTS.
4. WHENEVER SIDEWALK EXISTS OR IS PROPOSED, MODIFY METER LOCATION AS DIRECTED.
5. CORPORATION STOP SHALL BE FORD FB1000-4-G-NL, MUELLER B-25008 OR APPROVED EQUAL.
6. SERVICE SHALL BE "K" TYPE COPPER, OR COPPER TUBE SIZE POLYETHYLENE (PE) 4710, SODR-9 (200 psi).

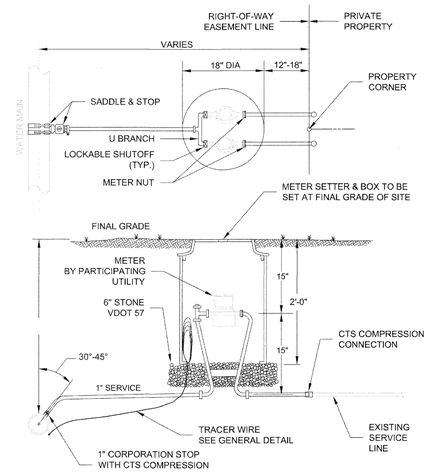

WESTERN VIRGINIA REGIONAL - CONSTRUCTION DETAIL

DOUBLE RESIDENTIAL WATER SERVICE (REPLACEMENT OF EXISTING SERVICE) — 02/10/15 — **W-4E**

1. ALL METERS ARE TO BE PROVIDED AND INSTALLED BY PARTICIPATING UTILITY AT OWNER/DEVELOPER'S EXPENSE. METER BOX, SERVICE, AND SETTER TO BE FURNISHED AND INSTALLED BY OWNER/DEVELOPER IN ACCORDANCE WITH THE MINIMUM REQUIREMENTS SHOWN BELOW.
2. SADDLES MUST BE USED WITH ALL PLASTIC & DUCTILE IRON PIPE. SERVICE SADDLES SHALL BE USED IN ACCORDANCE WITH WATER DISTRIBUTION PIPING SPECIFICATION. SERVICE SADDLES FOR PLASTIC PIPE SHALL BE: POWERSEAL 3417, OR 3412AS, ROMAC 202S, OR 306, OR FORD METER FS202 OR FS303. FOR DUCTILE IRON PIPE USE THE ABOVE OR POWERSEAL 3413, ROMAC 202 OR FORD METER F202.
3. CORPORATION STOP SHALL BE FORD FB1000-4-G-NL, MUELLER B-25008 OR APPROVED EQUAL.
4. METER BOXES LOCATED IN AREAS SUBJECT TO VEHICULAR TRAFFIC SHALL BE CONCRETE WITH H-20 RATED TRAFFIC BEARING HATCH. ALL OTHER METER BOXES SHALL BE CARSON/MID-STATES PLASTICS, INC. PLASTIC BOX, ADS CORRUGATED HDPE BOX, OR APPROVED EQUAL. MINIMUM METER BOX & LID DIAMETERS SHALL BE IN ACCORDANCE WITH SIZING CHART BELOW.
5. SERVICE SHALL BE "K" TYPE COPPER OR P.E. 4710 ,CTS O.D., MINIMUM CELL CLASS 445474E AND 445474D.
6. COPPER METER SETTER TO BE FORD, A.Y. MCDONALD OR APPROVED EQUAL WITH ANGLE DUAL CHECK VALVE AND BYPASS HAVING LOCKABLE SHUTOFF VALVE.
7. SERVICES REQUIRING METERS LARGER THAN 2-INCH SHALL BE REVIEWED BY THE PARTICIPATING UTILITY ON A CASE BY CASE BASIS.

TRAFFIC BEARING LOCATION

TRAFFIC BEARING VAULT AND H-20 RATED HATCH SHALL BE SIZED IN ACCORDANCE WITH DIMENSIONAL REQUIREMENTS SHOWN BELOW.

NON TRAFFIC BEARING LOCATION

SIZING CHART LID

METER SIZE	BOX DIA. (MIN.)	LID DIA. (MIN.)	COVER & LID MODEL (OR APPROVED EQUAL)
5/8"	18"	11½"	FORD A32-T OR AY MCDONALD 74M32AT
3/4"- 1"	24"	20"	FORD MC-24-T OR AY MCDONALD 74M24 T
1 1/2"-2"	30"	20"	FORD MC-30-T OR AY MCDONALD 74M30 T

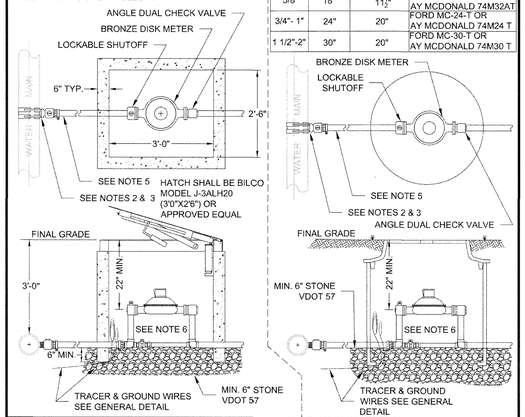

WESTERN VIRGINIA REGIONAL - CONSTRUCTION DETAIL

COMMERCIAL WATER SERVICE METER SIZES 5/8" - 2" — 02/10/15 — **W-5**

1. FILTER FABRIC TO BE INSTALLED BETWEEN BOTTOM OF PIPE AND STONE BEDDING. FABRIC TO EXTEND VERTICALLY A MINIMUM OF 6" FROM BOTTOM OF VAULT (FULL CIRCUMFERENCE).

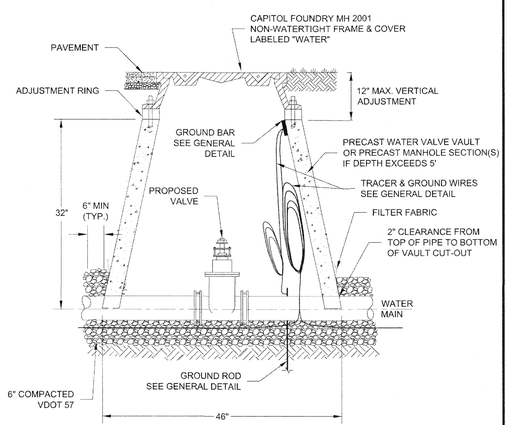

WESTERN VIRGINIA REGIONAL - CONSTRUCTION DETAIL

WATER LINE VALVE & VAULT — 01/01/14 — **W-9**

1. WHEN APPROVED BY PARTICIPATING UTILITY, FIRE HYDRANT ASSEMBLIES MAY BE USED AS PERMANENT END OF LINES.
2. DETAIL FOR UP TO 8" MAINS, LARGER LINES SEE WATER SYSTEM DESIGN STANDARDS FOR MIN. FLUSHING VALVE REQUIREMENTS.
3. THE END OF A PIPELINE SHALL NOT TERMINATE IN A PAVED AREA OR UNDER A CONCRETE CURB & GUTTER.
4. THE PIPING AND "STREET ELS" BETWEEN THE MAIN LINE AND 2" GATE VALVE SHALL BE LEAD FREE BRASS OR DUCTILE IRON.
5. RESTRAINED JOINTS SHALL BE INSTALLED BEFORE MJ PLUG FOR DISTANCE SHOWN IN THE "MINIMUM THRUST RESTRAINT OF PIPE JOINTS DESIGN LENGTHS" DETAIL FOR VALVE/PLUG AND CORRESPONDING PLUG DIAMETER.

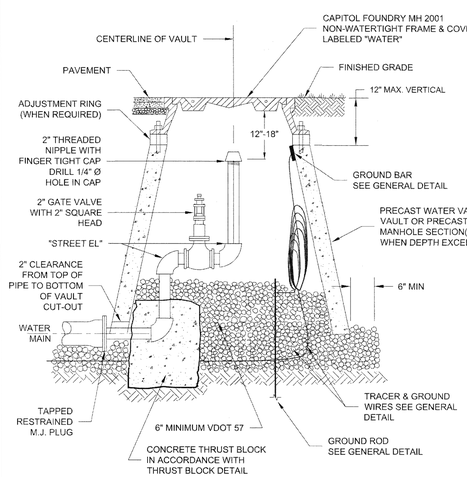

WESTERN VIRGINIA REGIONAL - CONSTRUCTION DETAIL

PERMANENT END OF LINE BLOW-OFF ASSEMBLY — 02/10/15 — **W-10**

1. FIRE HYDRANTS MAY BE USED AT LOW POINTS IN PLACE OF BLOW-OFFS.
2. THE PIPING AND "STREET ELS" BETWEEN CORPORATION STOP AND 2" GATE VALVE SHALL BE LEAD FREE BRASS OR DUCTILE IRON PIPE.
3. THE POINT OF CONNECTION TO THE WATER MAIN SHALL BE LOCATED NEAR THE BOTTOM OF THE MAIN (AS SHOWN) TO FACILITATE REMOVAL OF ACCUMULATED SEDIMENT.
4. SADDLES FOR PLASTIC PIPE SHALL BE PER RESIDENTIAL WATER SERVICE DETAIL.

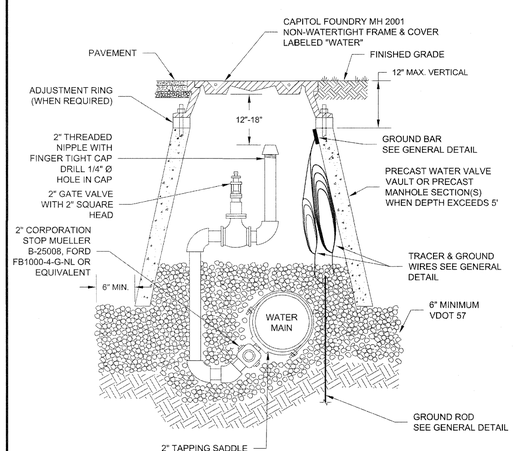

WESTERN VIRGINIA REGIONAL - CONSTRUCTION DETAIL

IN-LINE BLOW-OFF ASSEMBLY — 02/10/15 — **W-12**

1. SEE RESIDENTIAL WATER SERVICE DETAIL FOR SADDLE REQUIREMENTS.
2. LARGER COMBINATION VALVE MAY BE REQUIRED DEPENDING ON APPLICATION.

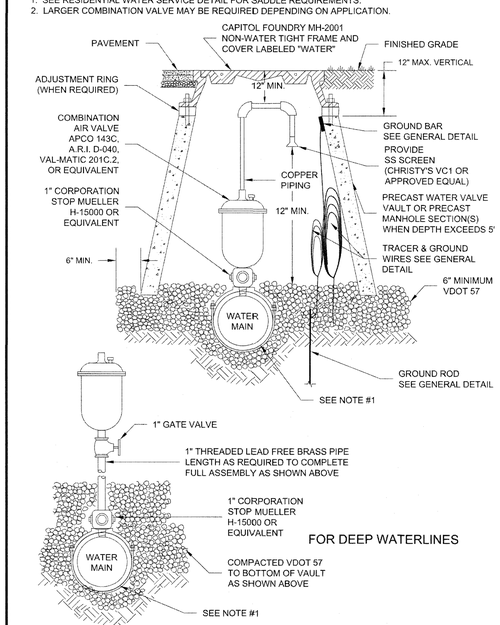

WESTERN VIRGINIA REGIONAL - CONSTRUCTION DETAIL

COMBINATION AIR VALVE ASSEMBLY — 01/01/14 — **W-13**

COMMONWEALTH OF VIRGINIA
GARY WAYNE FERN
Lic. No. 048914
10/14/2016
PROFESSIONAL ENGINEER

Whitman, Requardt & Associates, LLP
1700 Kraft Dr, Suite 1200, Blacksburg, VA 24060

WESTERN VIRGINIA WATER AUTHORITY
601 South Jefferson Street, Suite 300
Roanoke, Virginia 24011

DES:	PJM	SCALE:	N/A
DRAWN:	JES	HORIZ:	N/A
CHECK:	GWF	VERT:	N/A
DATE:	10/14/16		

2016 12-INCH WATER MAIN REPLACEMENTS
1. ORANGE AVENUE (11TH STREET TO 13TH STREET)
2. PETERS CREEK ROAD & HERSHBERGER ROAD
3. MELROSE AVENUE & COUNTRY CLUB DRIVE

REV	DATE	DESCRIPTION

SELECTED WESTERN VIRGINIA REGIONAL CONSTRUCTION DETAILS

DRAWING	SHEET
G-3	3a