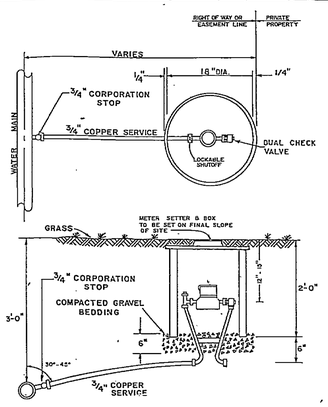

SINGLE RESIDENTIAL WATER SERVICE

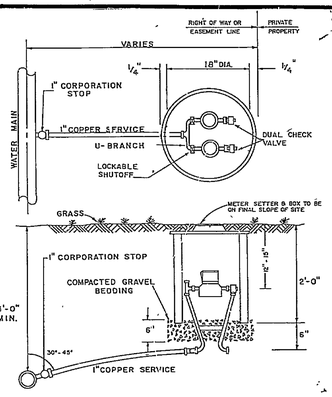

DOUBLE RESIDENTIAL WATER SERVICE

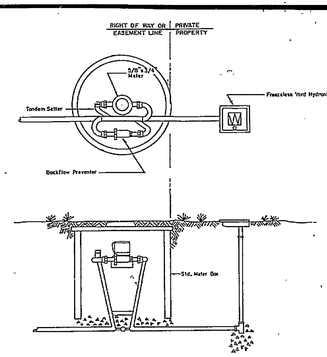

1) Setter to be Ford TA-72 or approved equal.
2) Backflow preventer to be Watts No.7 or approved equal.
3) Customer is responsible for operation and maintenance of backflow preventer.
4) Meter box must be Ford Concrete box or Southeastern Dist. Model MB-5, plastic box with Ford or Charlotte, Model C-32, cast-iron base & cover or approved equivalent.

TYPICAL SPRINKLER SERVICE

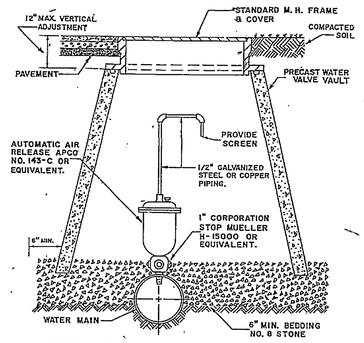

SADDLES MUST BE USED W/ALL PLASTIC & CLASS 50 DUCTILE IRON PIPE.

AUTOMATIC AIR RELEASE ASSEMBLY

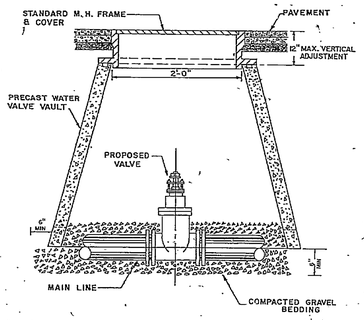

WATER LINE VALVE INSTALLATION

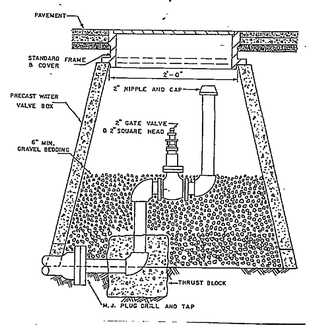

PERMANENT END OF LINE

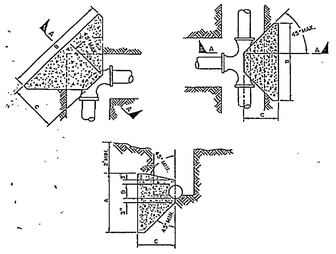

SECTION A-A

Pipe	Tee or Dead End			90° Bend			45° Bend			22.5° Less Bend		
Size	A	B	C	A	B	C	A	B	C	A	B	C
6"	1.2'	3.0'	1.0'	1.5'	3.3'	2.0'	1.2'	2.2'	1.0'	1.2'	2.0'	1.0'
8"	1.7'	3.8'	1.5'	2.0'	4.5'	2.0'	1.3'	3.6'	1.5	1.3'	2.0	1.0'
10"	2.0'	4.5'	2.0'	3.0'	4.7'	2.0'	1.7'	4.5'	2.0'	1.5'	2.6'	1.5'
12"	2.5'	5.7'	2.0'	3.5'	5.8'	2.5'	2.2'	5.0'	2.5'	1.7'	3.3'	1.5'
16"	3.5'	7.0'	3.0'	6.5'	8.0'	3.5'	3.0'	6.5'	3.0'	2.5'	4.0'	2.0'

NOTES:
1. The above noted dimensions are minimum based on concrete anchor extending to undisturbed soil, water pressure not to exceed 150 psi and, minimum soil bearing capacity of 2,500 psf; unsatisfactory soil bearing or excess pressure will require additional design.
2. Concrete shall not be poured on joints or bolts.
3. Concrete to be minimum 3,000 psi - 28 day compressive strength.

THRUST BLOCK FOR HORIZONTAL & LOWER VERTICAL BENDS

NOTE: TO BE USED WHEN STANDARD VAULT CONSTRUCTION EXCEEDS MAXIMUM VERTICAL HEIGHT OF 4'.

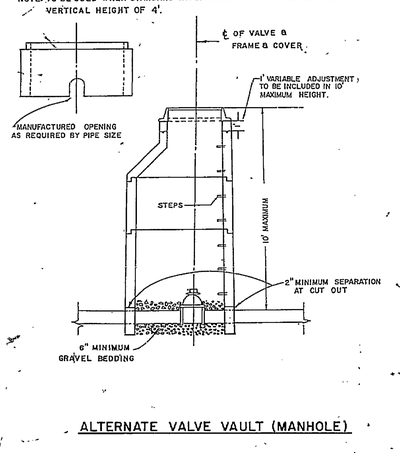

ALTERNATE VALVE VAULT (MANHOLE)

NOTES:
(1) MAIN BODY OF HYDRANT MUST BE SILVER AND HAVE RED CAPS AND BONNET.
(2) DISTANCE "A" WITH CURB AND GUTTER, 2' MIN., 4' MAX. FROM BACK OF CURB.
(3) DISTANCE "A" WITHOUT CURB AND GUTTER, 6' MIN., 12' MAX. FROM EDGE OF PAVEMENT.
(4) AREA A-"AND HYDRANT AT A RADIUS OF 4', TOBE APPROXIMATELY LEVEL AND UNOBSTRUCTED EXCEPT FOR ROAD CONSTRUCTION.

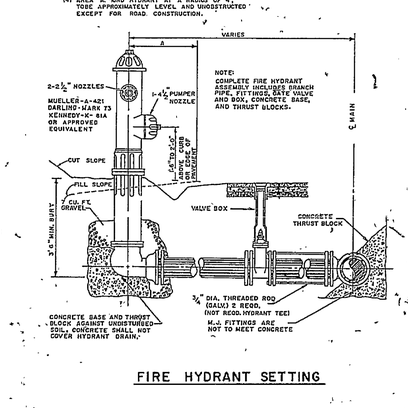

NOTE:
COMPLETE FIRE HYDRANT ASSEMBLY INCLUDES BRANCH PIPE, FITTINGS, GATE VALVE AND BOX, CONCRETE BASE, AND THRUST BLOCKS.

FIRE HYDRANT SETTING

NOTE:
1. SUBSTITUTE SEWER FOR WATER ON SANITARY SEWER MANHOLE FRAME & COVERS.

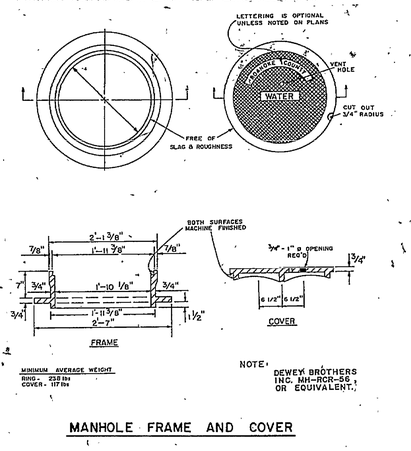

MINIMUM AVERAGE WEIGHT
RING - 238 lbs
COVER - 117 lbs

NOTE:
DEWEY BROTHERS INC. MH-RCR-56 OR EQUIVALENT.

MANHOLE FRAME AND COVER

VAULT & WATER STANDARDS FOR CONSTRUCTION

1. Vaults, manhole bases, risers, tapers and grade rings shall be precast reinforced concrete manufactured in accordance to Virginia Department of Transportation, Road and Bridge Specifications, Section 503.
2. Manhole base and riser sections construction shall be vertical with maximum 1" in 4' tilt.
3. A maximum of 2 construction grade rings or maximum of 1' of grade rings and frame and cover adjustment are allowable.
4. Final adjustment of frame and cover shall be in accordance to Frame and Cover Adjustment Detail using non shrink concrete with maximum of 4 bricks or concrete blocks for grade control. Frame and cover are to be set at finish grade or 1/4" above finish grade in pavement and yard areas and minimum 6" above finish grade in other areas. Manhole frames and covers are not to be set in drainage swale, valley gutter, etc.
5. Joints and openings in manhole units shall be made watertight by using butyl sealants, "O" ring gaskets or mastic. The concrete surface shall be cleaned prior to use of sealant.
6. Frame and Covers
   a) Dewey Brothers Inc. MH - RCR - 56.
   b) Approved equal.
7. All lift holes, openings around pipe, etc. shall be filled from inside and outside to thickness of structure.
8. All units used in manhole and vault construction shall be securely connected by interlocking between units, concrete collars or other approved methods.
9. Area around meter box at a radius of 4' to be on finish grade and unobstructed except for road construction.

APPROVED MATERIALS

1. Meter Boxes
   a) Ford Ironcrete meter box with No. 2 ironcrete top or approved equal.
   b) Southeastern Distributor Model MB-5 Plastic box with Ford or Charlotte Model C-32 cast iron base and cover (Not approved for roadway area).
   c) Approved equal.
2. Meter Setter (including inlet riser valve and double check valve on outlet).
   a) Ford VBHH 72-15-MD
   b) Approved equal.
3. Meter Setter Extender or Riser
   a) Not allowed unless approved by the Utility Director.
4. Corporation Stop
   a) Mueller Model H-1500.
   b) Ford Model F-600.
   c) Approved equal.
5. U-Branch
   a) Ford Model U28-43.
   b) Mueller Model H 15362.
   c) Approved equal.
6. Service Saddles (for PVC Pipe)
   a) Ford Model FS 202 and FC 202 with stainless steel band and bolts.
   b) Approved equal.

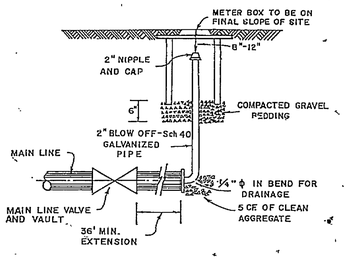

BLOW OFF ASSEMBLY FOR MAIN LINE TEMPORARY TERMINATION

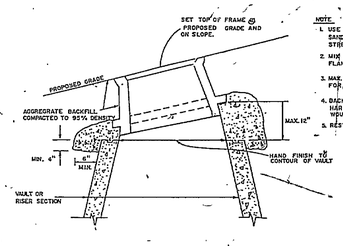

NOTE:
1. USE MODERATELY STIFF MIX OF NON SHRINK CEMENT, SAND AND 1/2", AND LESS DIAMETER GRAVEL WITH 28 DAYS, STRENGTH AT 3,000 PSI.
2. MIX IS TO BE FORCED INTO ALL GROOVES AND UNDER FLANGE OF FRAME AND LEFT AT OR ABOVE TOP OF FLANGE
3. MAX. OF 4 BRICK OR CONCRETE BLOCKS TO BE USED FOR GRADE CONTROL.
4. BACKFILL AROUND FRAME AND COVER, ONLY AFTER MIX HARD TO THE TOUCH. USE OF HIGH EARLY STRENGTH CEMENT WOULD REDUCE THIS DELAY SUBSTANTIALLY.
5. RESTRICT TRAFFIC LOAD FOR MIN. 24 HOURS

MANHOLE FRAME & COVER ADJUSTMENT

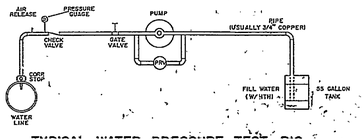

TYPICAL WATER PRESSURE TEST RIG

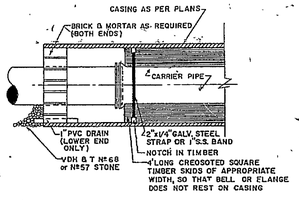

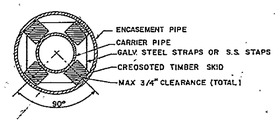

FOR DUCTILE IRON PIPE, SOAP-BASED LUBRICANT MAY BE USED TO EASE SLIDING OF SKID. FOR PVC PIPE, FLAX SOAP OR DRILLING MUD SHOULD BE UTILIZED FOR LUBRICATION.

PIPE SUPPORT IN CASING PIPE

ENGINEERING DEPARTMENT AND UTILITY DEPARTMENT

NO.	REVISIONS	DATE
		3/16/88

WATER DETAILS

DATE: 03-16-88
SCALE: NOT TO SCALE
DRAWING BY: A.F.
DESIGNED BY: P.T.H.
APPROVED BY:

SHEET OF

RC-L90