MANHOLE FRAME AND COVER

RICHARD FOUNDRY CO. DESIGN NO. B-1444,
DEWEY BROS., INC. MH-RCR-56, OR EQUIVALENT

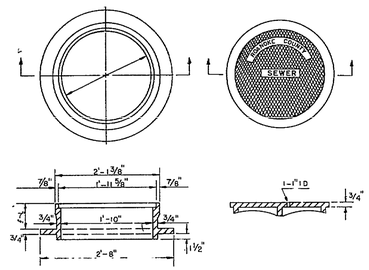

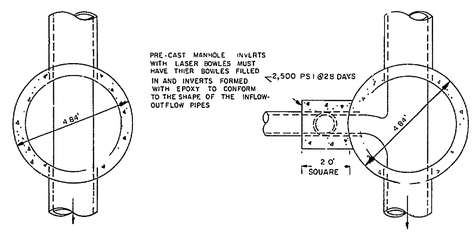

SECTION A-A
STANDARD MANHOLE

SECTION B-B
DROP MANHOLE

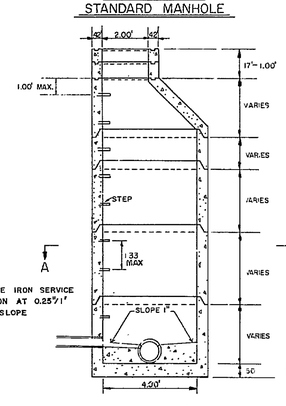

STANDARD MANHOLE

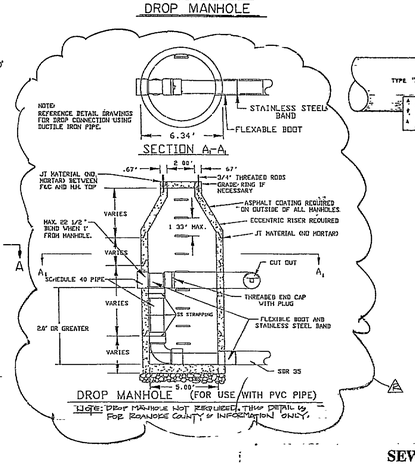

DROP MANHOLE (FOR USE WITH PVC PIPE)

NOTE: DROP MANHOLE NOT REQUIRED. THIS DETAIL IS FOR ROANOKE COUNTY'S INFORMATION ONLY.

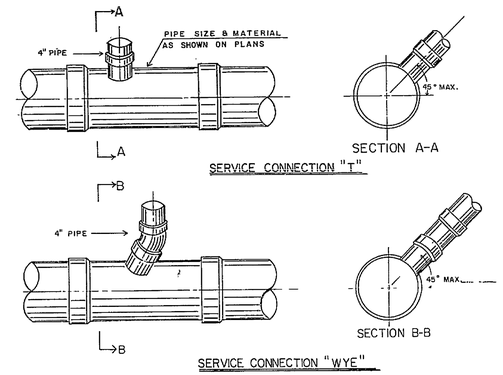

SERVICE CONNECTION "T"

SERVICE CONNECTION "WYE"

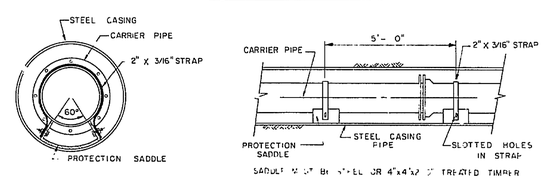

BORING AND CASING

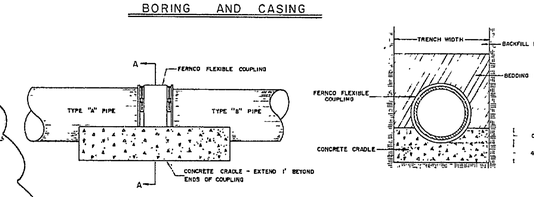

JOINING DISSIMILAR PIPE

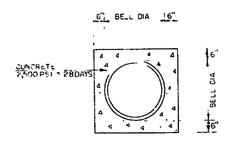

CONCRETE ENCASED PIPE

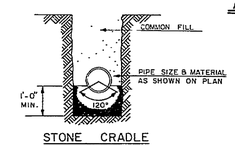

STONE CRADLE

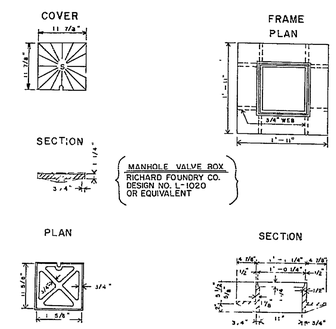

CLEAN OUT FRAME AND COVER

SCALE: 1" = 1'-0"

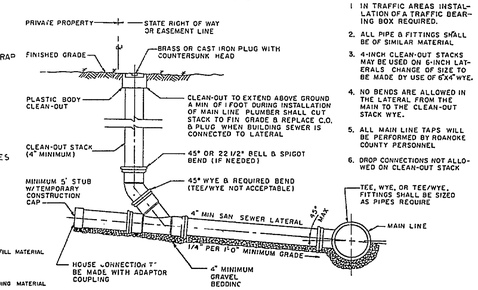

SANITARY SEWER LATERAL

SCALE: 1" = 1'-0"

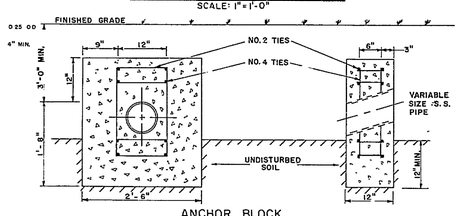

ANCHOR BLOCK

SCALE: 1" = 1'-0"

NOTES

1. IN TRAFFIC AREAS INSTALLATION OF A TRAFFIC BEARING BOX REQUIRED.
2. ALL PIPE & FITTINGS SHALL BE OF SIMILAR MATERIAL.
3. 4-INCH CLEAN-OUT STACKS MAY BE USED ON 6-INCH LATERALS CHANGE OF SIZE TO BE MADE BY USE OF 6"X4" WYE.
4. NO BENDS ARE ALLOWED IN THE LATERAL FROM THE MAIN TO THE CLEAN-OUT STACK WYE.
5. ALL MAIN LINE TAPS WILL BE PERFORMED BY ROANOKE COUNTY PERSONNEL
6. DROP CONNECTIONS NOT ALLOWED ON CLEAN-OUT STACK

SEWER NOTES

A minimum cover of three (3) feet is required over proposed lines.

Contractor shall be responsible for locating and uncovering all manholes after paving. Manhole tops shall be adjusted to grade if necessary.

All existing utilities may not be shown or may not be shown in the exact location. The contractor shall comply with State Water Works Regulations, Section 12.05.03, where lines cross.

House connections are to be made with 4" pipe installed on a minimum grade of 1/4 inch to 1 foot in R/W.

Laterals from manholes shall be PVC or Ductile Iron of sufficient length to provide two (2) feet of bearing on natural ground. The transition from ductile iron to asbestos cement or concrete pipe shall be made with an adapter coupling in R/W.

All trenches in existing or future highway right-of-ways shall be compacted according to V.D.H.&T. standards.

Lines shall be staked prior to construction.

Manholes shall be vacuum tested

Dewberry & Davis
Architects Engineers Planners Surveyors
Dan L. Davis, Leader
Roanoke, Virginia 24011
Telephone: (703) 342-2500
Fax: (703) 342-2505 Post Office Box 10001

© 1992

DIVISION OF FORENSIC SCIENCE
WESTERN LABORATORY/
MEDICAL EXAMINERS FACILITY
ROANOKE COUNTY, VIRGINIA

DETAILS

No.	BY	DATE	REVISIONS
1			ADDENDA ISSUED FOR REVIEW
2			ADDENDA ISSUED FOR REVIEW
3			
4			

ENGINEER'S SEAL

Scale 1" = 30'
Sheet C-6.2R
Drawn by: AGR
Checked by: RBS
Date: 6-24-93
File No.

RC-5093