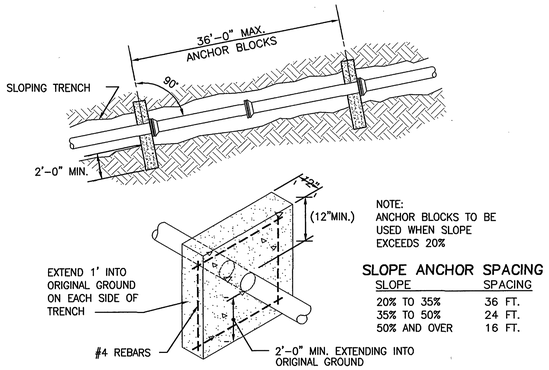

NOTE:
ANCHOR BLOCKS TO BE USED WHEN SLOPE EXCEEDS 20%

SLOPE ANCHOR SPACING

SLOPE	SPACING
20% TO 35%	36 FT.
35% TO 50%	24 FT.
50% AND OVER	16 FT.

TYPICAL DETAIL – ANCHOR BLOCK
NOT TO SCALE

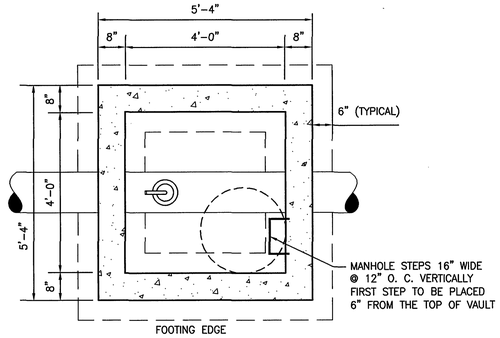

PLAN

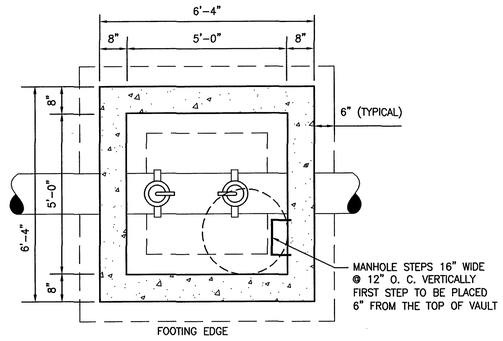

PLAN

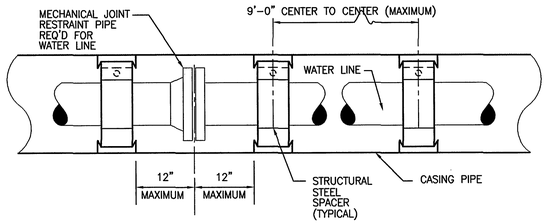

NOTES:
1. PROVIDE DOUBLE SPACERS ON EACH END OF CASING PIPE.

TYPICAL DETAIL – CASING SKIDS
NOT TO SCALE

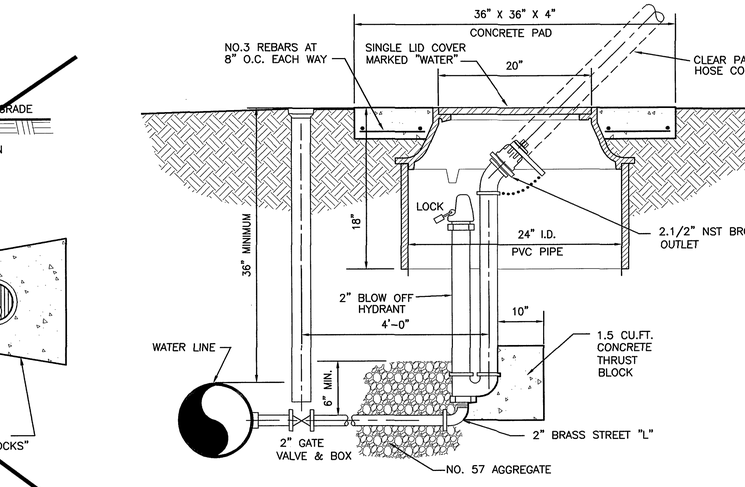

SECTION

NOTES:
1. AIR RELEASE & VACUUM VALVE SHALL BE 1-INCH UNLESS OTHERWISE NOTED.
2. PIPING AND FITTINGS FOR AIR RELEASE & VACUUM VALVE SHALL BE THE SAME SIZE AS THE VALVE.
3. PIPING FOR AIR RELEASE & VACUUM VALVE SHALL BE BRASS.
4. VAULT SHALL BE CAST-IN-PLACE OR PRE-CAST. A MANHOLE WITH A MINIMUM DIAMETER OF 4'-0" IS ACCEPTABLE IN LIEU OF A SQUARE VAULT.

TYPICAL DETAIL – COMBINATION AIR RELEASE & VACUUM VALVE
NOT TO SCALE (12-INCH AND SMALLER WATER MAIN)

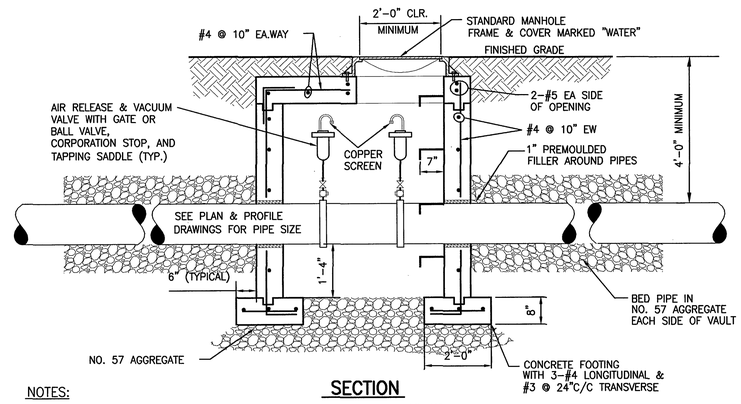

SECTION

NOTES:
1. AIR RELEASE & VACUUM VALVES SHALL BE 2-INCH UNLESS OTHERWISE NOTED.
2. PIPING AND FITTINGS FOR AIR RELEASE & VACUUM VALVES SHALL BE THE SAME SIZE AS THE VALVE.
3. PIPING FOR AIR RELEASE & VACUUM VALVES SHALL BE BRASS.
4. TAPPING SADDLE SHALL BE STYLE 202B (DUCTILE IRON PIPE) OR STYLE 202BS (PVC PIPE) AS MANUFACTURED BY FORD METER BOX CO., INC., OR APPROVED EQUAL.
5. VAULT SHALL BE CAST-IN-PLACE OR PRE-CAST. A MANHOLE WITH A MINIMUM DIAMETER OF 5'-0" IS ACCEPTABLE IN LIEU OF A SQUARE VAULT.

TYPICAL DETAIL – COMBINATION AIR RELEASE & VACUUM VALVE
NOT TO SCALE (16-INCH WATER MAIN)

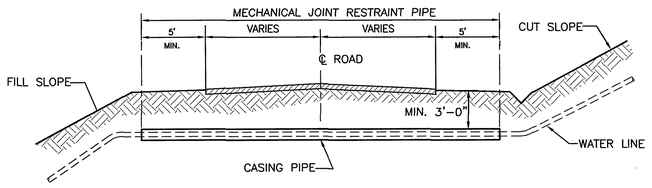

NOTE:
1. SEE SPECIFICATIONS FOR CASING PIPE SIZE.
2. RESTRAINED JOINTS SHALL BE REQUIRED WITHIN 20 FEET OF THE END OF THE CASING PIPE ON BOTH SIDES OF THE ROAD CROSSING.

TYPICAL DETAIL – WATER LINE ROAD CROSSING
NOT TO SCALE

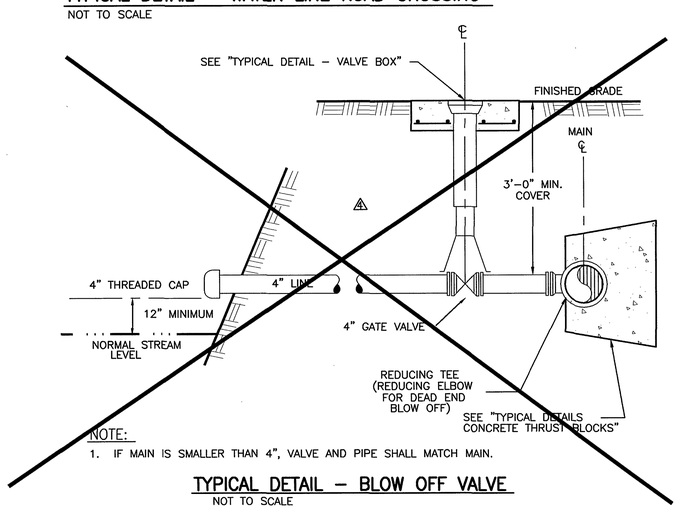

NOTE:
1. IF MAIN IS SMALLER THAN 4", VALVE AND PIPE SHALL MATCH MAIN.

TYPICAL DETAIL – BLOW OFF VALVE
NOT TO SCALE

TYPICAL DETAIL – BLOW OFF VALVE
NOT TO SCALE (ALTERNATE)

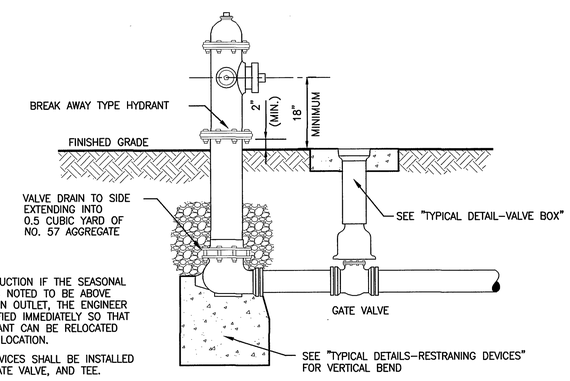

NOTES:
1. DURING CONSTRUCTION IF THE SEASONAL WATER LEVEL IS NOTED TO BE ABOVE THE VALVE DRAIN OUTLET, THE ENGINEER SHALL BE NOTIFIED IMMEDIATELY SO THAT THE FIRE HYDRANT CAN BE RELOCATED TO A SUITABLE LOCATION.
2. RESTRAINING DEVICES SHALL BE INSTALLED AT HYDRANT, GATE VALVE, AND TEE.

TYPICAL DETAIL – FIRE HYDRANT
NOT TO SCALE

COMMONWEALTH OF VIRGINIA
GREGORY H. HURST
No. 031700
1/5/06
PROFESSIONAL ENGINEER

Thompson +Litton
Engineers
Architects
Planners

STATE ROUTE 122/BURNT CHIMNEY/SMITH MOUNTAIN LAKE
WATER DISTRIBUTION SYSTEM PROJECT
PHASE I
FOR THE
FRANKLIN COUNTY BOARD OF SUPERVISORS

STANDARD WATER LINE DETAILS

No.	Date	Revision
	07/31/03	REVIEW DOCUMENTS ISSUED
	01/27/04	FINAL DOCUMENTS ISSUED
	04/04/04	BID DOCUMENTS ISSUED
	05/24/04	ADDENDUM NO.2
1	08/02/04	CONSTRUCTION DOCUMENTS ISSUED
	12/02/05	RECORD DOCUMENTS ISSUED

Designed:
Drawn:
Checked:
Date: JULY, 2003

Project No.
7363-03

Sheet No.
21