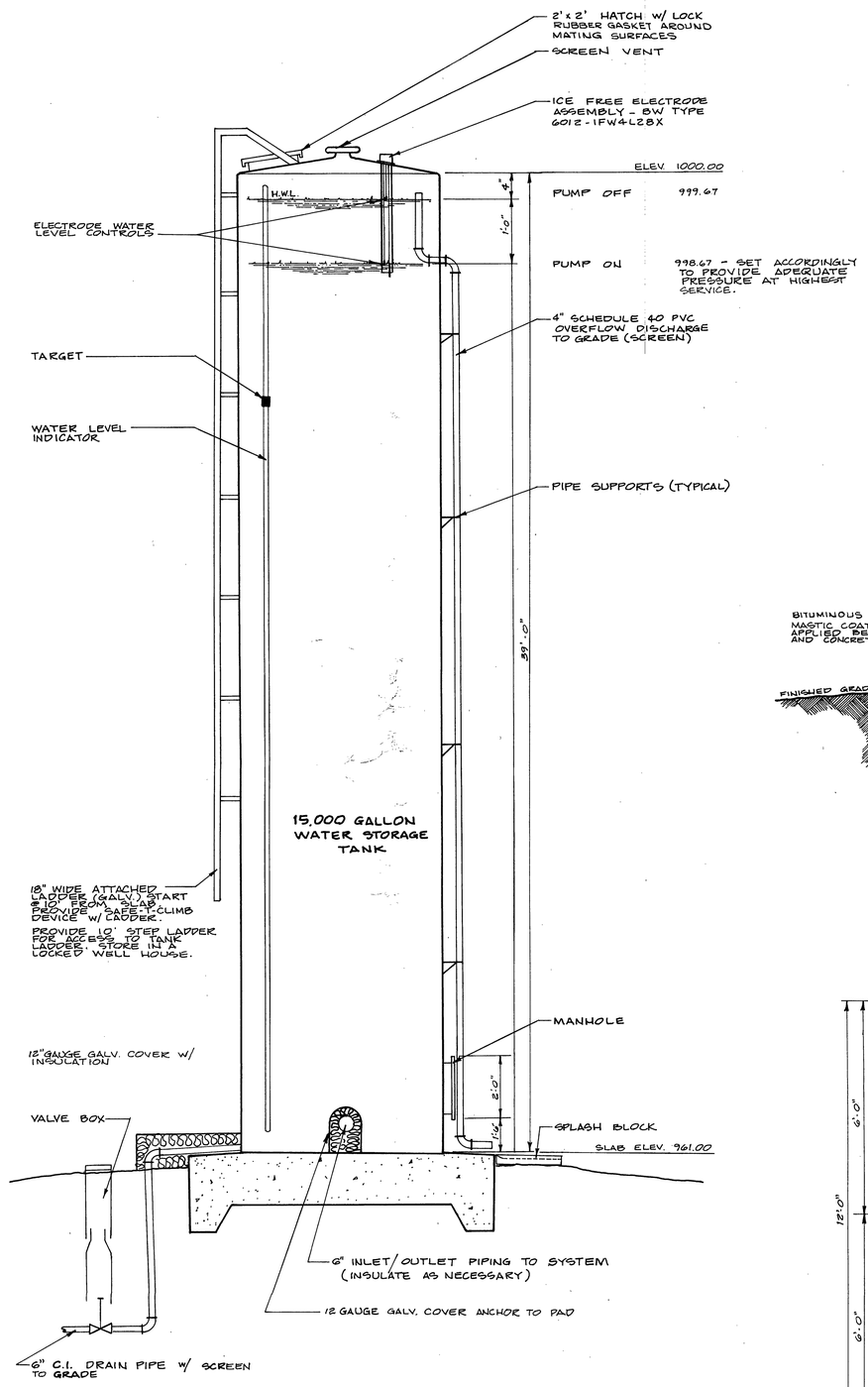

WATER STORAGE TANK ELEVATION

NOT TO SCALE

TANK ELEVATION PROVIDED JIM FLEMING TANK CO., WALNUT COVE, N.C.

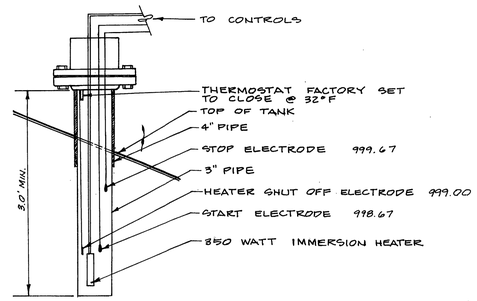

ELECTRODE DETAIL

NOT TO SCALE

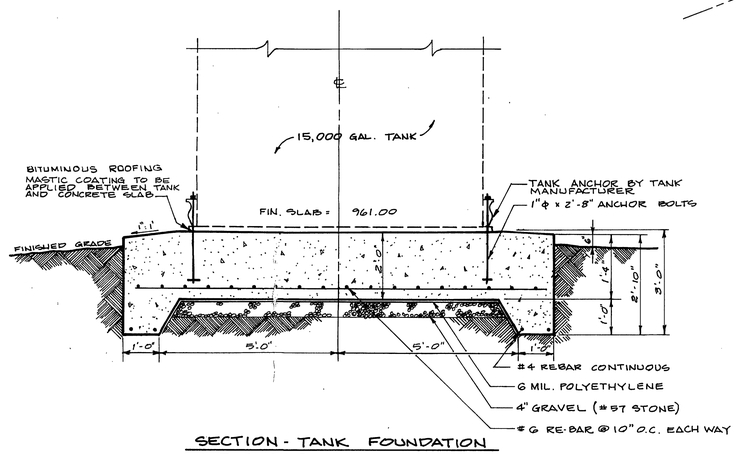

SECTION - TANK FOUNDATION

NOT TO SCALE

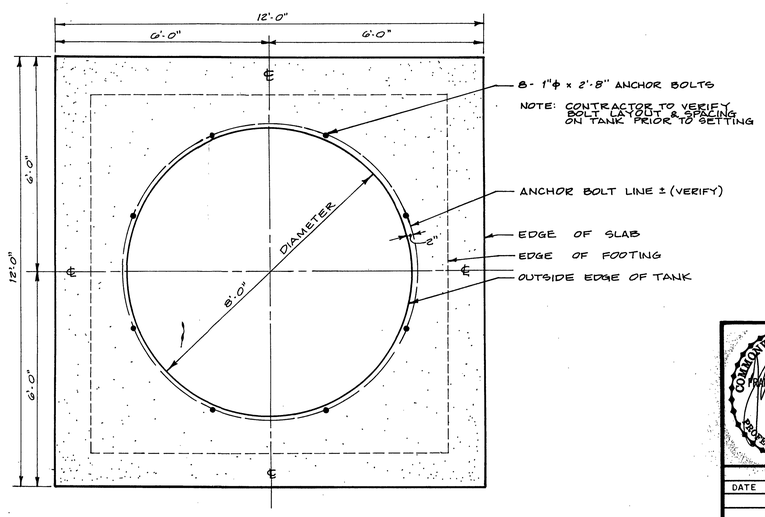

FOUNDATION PLAN FOR TANK

NOT TO SCALE

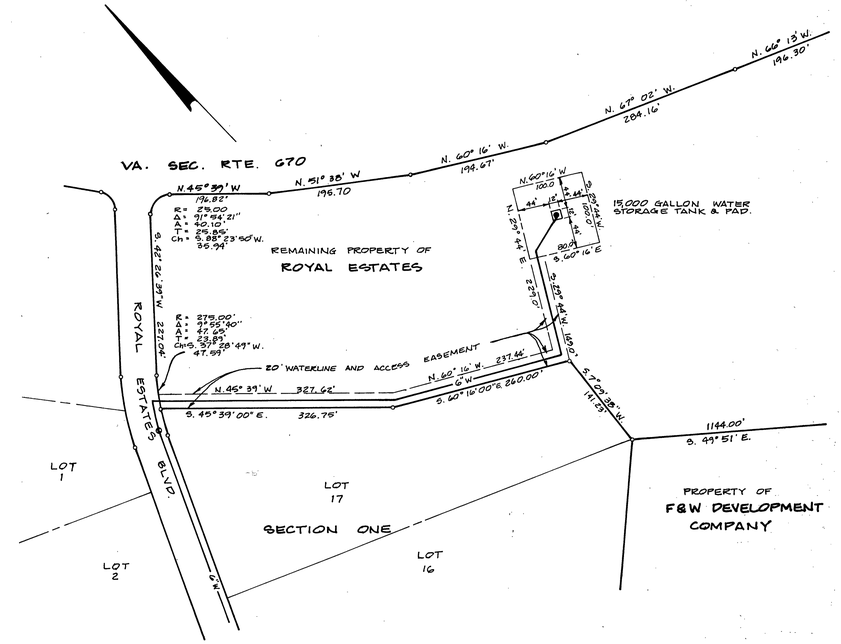

WATER STORAGE TANK LOT & EASEMENT PLAN

SCALE: 1" = 100'

WELL # 7 - PUMP DESIGN DATA

RESERVOIR OVERFLOW ELEV.	999.75
WELL HEAD ELEVATION	871.50
PUMP INTAKE	551.5
STATIC HEAD DIFFERENTIAL	324.0
FRICTION HEAD	7.0
TOTAL DYNAMIC HEAD	331.0

PUMP SELECTION
4" GOULDS SUBMERSIBLE 25EL30412
3 H.P. 26 STAGE
SINGLE PHASE / 230 VOLT
DYNAMIC HEAD 331 @
18 G.P.M. DELIVERY NOTE THROTTLE PUMP TO 18 G.P.M.

WELL # 8 - PUMP DESIGN DATA

RESERVOIR OVERFLOW ELEV.	999.75
WELL HEAD ELEVATION	871.50
PUMP INTAKE	511.50
STATIC HEAD DIFFERENTIAL	374.0
FRICTION HEAD	7.0
TOTAL DYNAMIC HEAD	381.0

PUMP SELECTION
4" GOULDS SUBMERSIBLE 25EL50412
5 H.P. 26 STAGE
SINGLE PHASE / 230 VOLT
DYNAMIC HEAD 381' @
29 G.P.M. DELIVERY

NOTE:
PUMP OF EQUAL RATING, DESIGN, AND QUALITY MAY BE APPROVED UPON SUBMITTAL OF NECESSARY SPECIFICATIONS AND PUMP CURVES TO THE ENGINEER.

MAY 1988
RECEIVED
VA. DEPT. OF WATER RESOURCES
DANVILLE REGIONAL OFFICE

COMMONWEALTH OF VIRGINIA
FRANK B. CALDWELL, III
No. 9184
PROFESSIONAL ENGINEER

WATER DISTRIBUTION SYSTEM
FOR
ROYAL ESTATES
GILLS CREEK MAGISTERIAL DISTRICT
FRANKLIN COUNTY, VIRGINIA

SCALE: AS NOTED

DATE: 3 APRIL 1987

REVISIONS		
DATE		BY

DESIGNED BY JTT
DRAWN BY JTT
CHECKED BY
W.O. # 86-2455
N.B.

T. P. PARKER & SON
engineers & surveyors, ltd.
TELEPHONE (703) 387-1153
P.O. DRAWER 473, SALEM, VIRGINIA 24153