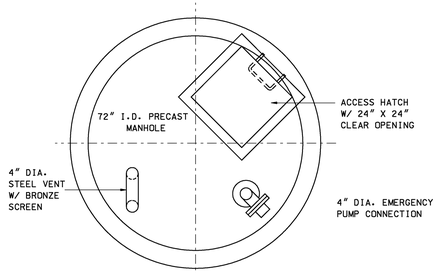

TOP PLAN
EMERGENCY CONNECTION MANHOLE

SCALE : 1/2" = 1'-0"

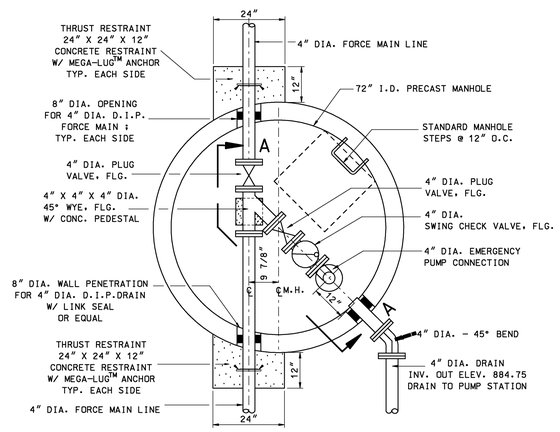

PIPING PLAN
EMERGENCY CONNECTION MANHOLE

SCALE : 1/2" = 1'-0"

EMERGENCY PUMP CONNECTION
PROVIDE 1-4" DIA. COMPANION FLANGE WITH 1-4" DIA. GROOVED HOSE COUPLING "F" ADAPTOR (ADAPTOR X NPT MALE END) AND ONE (1) - 4" DIA. LOCKING DUST CAP. USE TYPE 316 SS

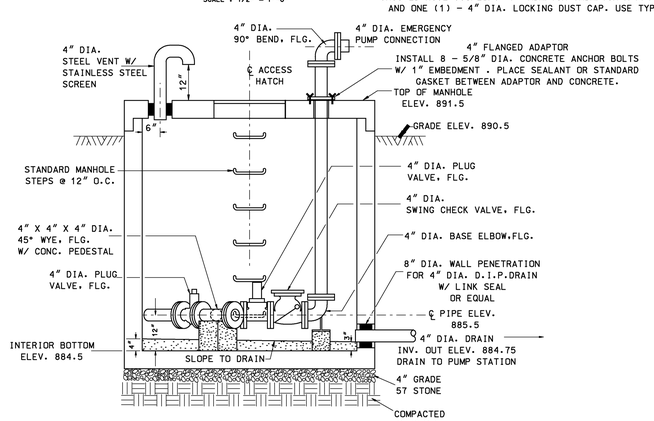

SECTION A-A
EMERGENCY CONNECTION MANHOLE

EMERGENCY CONNECTION MANHOLE ALTERNATE DETAILS

SCALE : 1/2" = 1'-0"

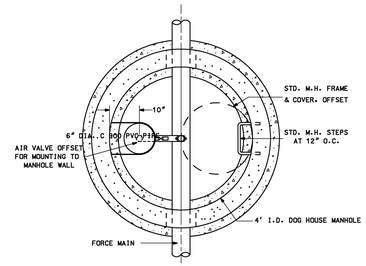

PLAN
AIR VALVE MANHOLE
(M.H. TOP REMOVED)

SCALE : 1/2" = 1'-0"

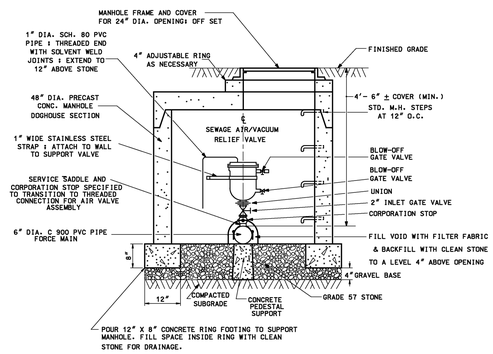

SEWAGE FORCE MAIN
AIR/ VACUUM RELIEF VALVE
SHORT BODY VALVE DETAIL

SCALE : 1/2" = 1'-0"

NOTES :
1. SEWAGE AIR RELEASE / VACUUM RELIEF VALVE MAY BE OFF-SET AFTER THE INLET GATE VALVE TO FACILITATE MOUNTING THE VALVE ASSEMBLY SECURELY TO THE MANHOLE WALL. TWO (2) INCH PIPE EXTENSION SHALL HAVE A POSITIVE GRADIENT.

2. DETAIL SHOWN DOES NOT INCLUDE A LINE VALVE AS SHOWN IN THE LONG BODY VALVE DETAIL. WHERE LINE VALVES ARE SPECIFIED WITH THE AIR VALVE ASSEMBLY. A LINE VALVE SHALL BE INSTALLED AS SHOWN IN THE LONG BODY AIR VALVE DETAIL.

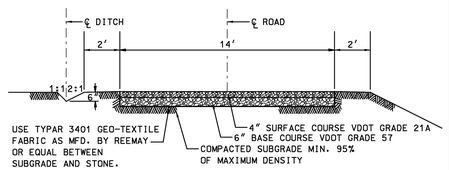

TYPICAL GRAVEL ROAD SECTION

SCALE : N.T.S.

NOTE :
1. ALL MATERAL INCORPORATED IN THE ACCESS ROAD AND PARKING AREA SHALL MEET VDOT SPECIFICATIONS.

2. STANDARD TYPAR 3401 WIDTH IS 12.5' , CONTRACTOR SHALL BURY ENTIRE WIDTH BELOW FINISHED GRADE. STANDARD ROLL LENGTH OF GEOTEXTILE IS 100 YARDS. OVERLAP ENDS OF FABRIC 4.0' .

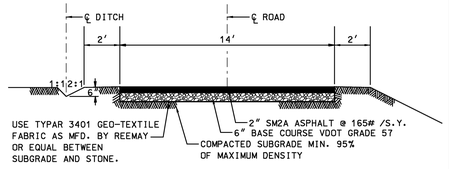

TYPICAL ROAD SECTION TO SEWAGE PUMP STATION

SCALE : N.T.S.

NOTE :
1. ALL MATERAL INCORPORATED IN THE ACCESS ROAD AND PARKING AREA SHALL MEET VDOT SPECIFICATIONS.

2. STANDARD TYPAR 3401 WIDTH IS 12.5' , CONTRACTOR SHALL BURY ENTIRE WIDTH BELOW FINISHED GRADE. STANDARD ROLL LENGTH OF GEOTEXTILE IS 100 YARDS. OVERLAP ENDS OF FABRIC 4.0' .

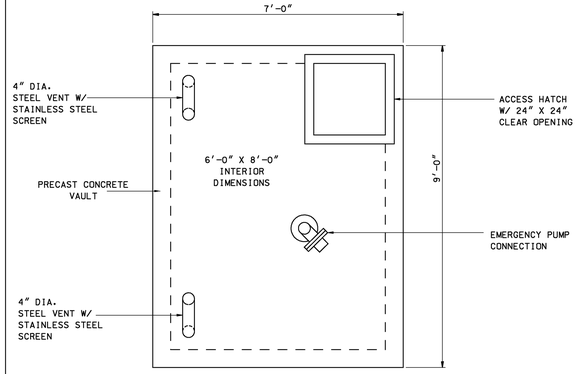

TOP OF VAULT

SCALE : 1/2" = 1'-0"

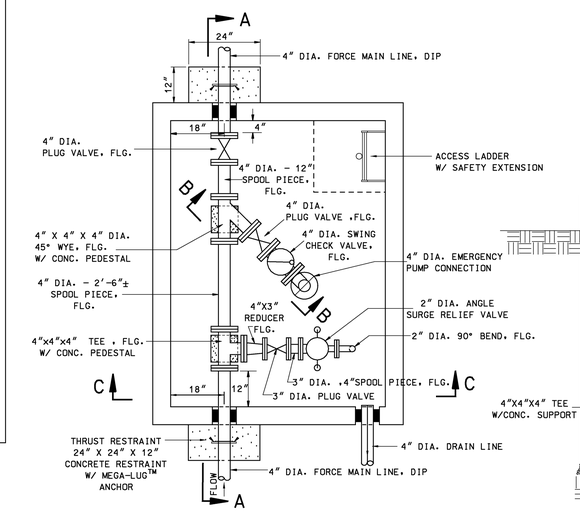

PIPING PLAN

SCALE : 1/2" = 1'-0"

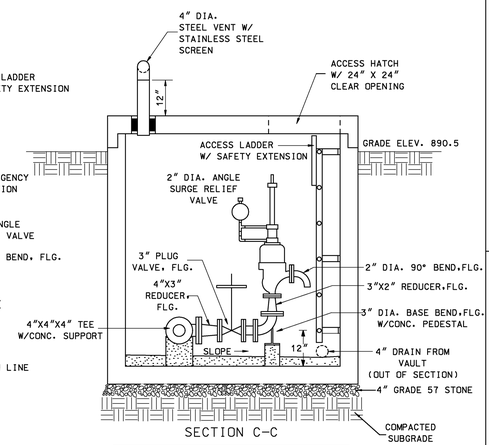

SECTION C-C

SCALE : 1/2" = 1'-0"

EMERGENCY PUMP CONNECTION
PROVIDE 1-4" DIA. COMPANION FLANGE WITH 1-4" DIA. GROOVED HOSE COUPLING "F" ADAPTOR (ADAPTOR X NPT MALE END) AND ONE (1) - 4" DIA. LOCKING DUST CAP. USE TYPE 316 SS

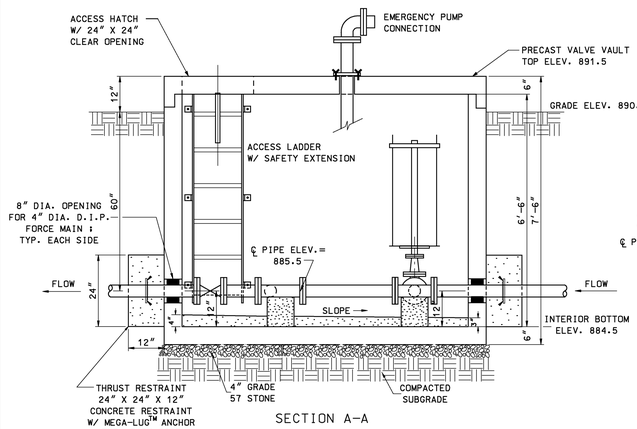

SECTION A-A

SCALE : 1/2" = 1'-0"

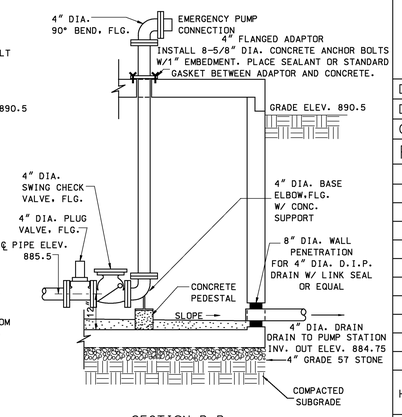

SECTION B-B

SCALE : 1/2" = 1'-0"

COMBINED SURGE RELIEF AND EMERGENCY PUMP CONNECTION VAULT DETAILS

BERKLEY HOWELL & ASSOC., P.C.
ENGINEERS • SURVEYORS • PLANNERS
306 ENTERPRISE DRIVE, SUITE C
FOREST, VIRGINIA 24551
PHONE: (434)385-7548 FAX: (434)385-6178

COMMONWEALTH OF VIRGINIA
WM. D. BERKLEY, JR.
Lic. No. 10759
04-25-08
PROFESSIONAL ENGINEER

WESTLAKE VILLAGE
BUSINESS PARK SOUTH
SEWERAGE FACILITIES
GILLS CREEK DISTRICT FRANKLIN CO., VA.

SEWAGE PUMP STATION AND FORCE MAIN ALTERNATE CONSTRUCTION DETAILS

DATE: 01-10-08
DRAWN:
CHECKED:

REVISIONS

NO.	DATE
1	03-04-08
2	03-31-08
3	04-14-08
4	04-25-08

SCALES
HORIZ: AS SHOWN
VERT: AS SHOWN

COMM. NO.
030066

SHEET NO.
13 OF 19