1. ALL METERS ARE TO BE PROVIDED AND INSTALLED BY PARTICIPATING UTILITY AT OWNER/DEVELOPERS EXPENSE. METER BOX, SERVICE, AND SETTER TO BE FURNISHED AND INSTALLED BY OWNER/DEVELOPER IN ACCORDANCE WITH THE MINIMUM REQUIREMENTS SHOWN BELOW.
2. SADDLES MUST BE USED WITH ALL PLASTIC & DUCTILE IRON PIPE. SERVICE SADDLES SHALL BE USED IN ACCORDANCE WITH WATER DISTRIBUTION PIPING SPECIFICATION. SERVICE SADDLES FOR PLASTIC PIPE SHALL BE: POWERSEAL 3417, OR 3412AS, ROMAC 202S, OR 306, OR FORD METER FS202 OR FS303. FOR DUCTILE IRON PIPE USE THE ABOVE OR POWERSEAL 3413, ROMAC 202 OR FORD METER F202.
3. CORPORATION STOP SHALL BE FORD F1000-4-G, MUELLER H-15000 OR APPROVED EQUAL.
4. METER BOXES LOCATED IN AN AREAS SUBJECT TO VEHICULAR TRAFFIC SHALL BE CONCRETE WITH H-20 RATED TRAFFIC BEARING HATCH. ALL OTHER METER BOXES MAY BE CARSON/MID-STATES PLASTICS, INC. PLASTIC BOX WITH FORD A32-7 (ELECTRONIC READ LID) OR A. Y. McDONALD MODEL 74M32C-TC CAST IRON BASE & COVER OR APPROVED EQUAL.
5. SERVICE SHALL BE "K" TYPE COPPER OR P.E. 4710 ,CTS O.D., MINIMUM CELL CLASS 445474E AND 445474D.
6. COPPER METER SETTER TO BE FORD, A.Y. MCDONALD OR APPROVED EQUAL WITH ANGLE DUAL CHECK VALVE, AND BYPASS HAVING LOCKABLE SHUTOFF VALVE.
7. SERVICES REQUIRING METERS LARGER THAN 2-INCH SHALL BE REVIEWED BY THE PARTICIPATING UTILITY ON A CASE BY CASE BASIS.

TRAFFIC BEARING LOCATION | NON TRAFFIC BEARING LOCATION

TRAFFIC BEARING VAULT AND H-20 RATED HATCH SHALL BE SIZED IN ACCORDANCE WITH DIMENSIONAL REQUIREMENTS SHOWN BELOW.

SIZING CHART

METER BOX SIZE	(MIN)	
5/8"	18"	
3/4", 1"	24"	
1 1/2",2"	30"	

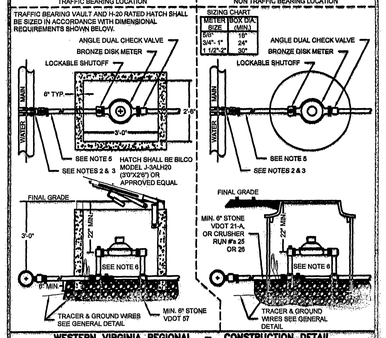

WESTERN VIRGINIA REGIONAL – CONSTRUCTION DETAIL

COMMERCIAL WATER SERVICE METER SIZES 5/8" - 2" — W-5 — 01/01/12

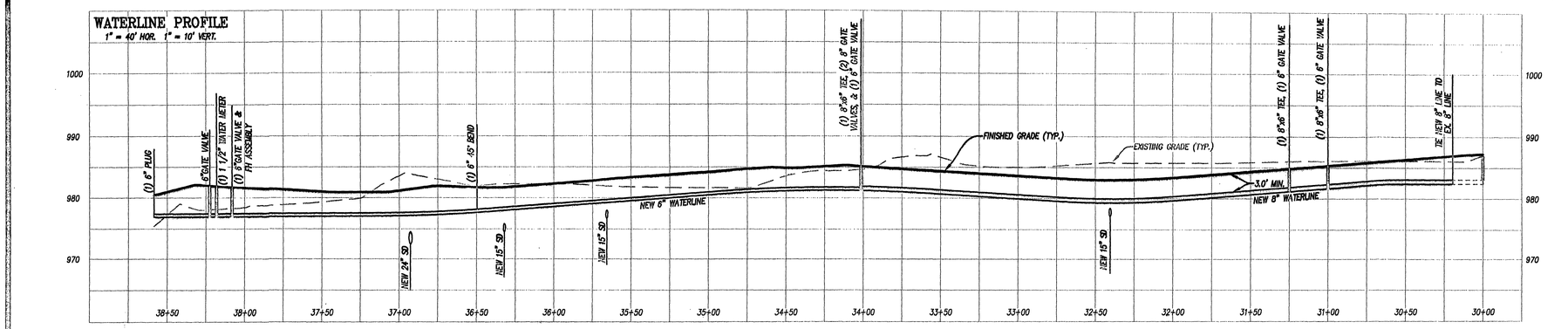

1. FILTER FABRIC TO BE INSTALLED BETWIEN BOTTOM OF PIPE AND STONE BEDDING. FABRIC TO EXTEND VERTICALLY A MINIMUM OF 5' FROM BOTTOM OF VAULT (FULL CIRCUMFERENCE).

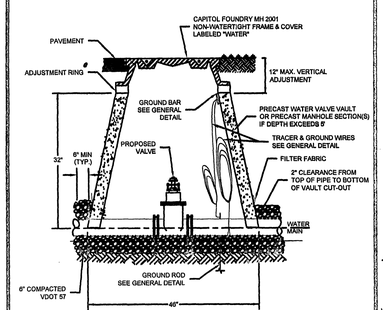

WESTERN VIRGINIA REGIONAL – CONSTRUCTION DETAIL

WATER LINE VALVE & VAULT — W-9 — 01/01/12

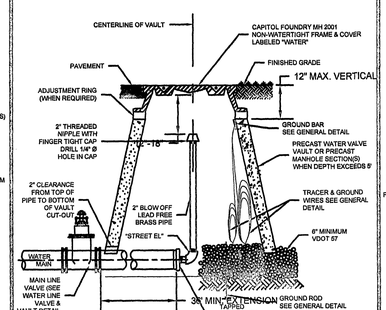

WESTERN VIRGINIA REGIONAL – CONSTRUCTION DETAIL

TEMPORARY END OF LINE BLOW-OFF ASSEMBLY — W-11 — 01/01/12

1. PUBLIC HYDRANTS SHALL BE PAINTED SILVER WITH AN OIL-BASED PAINT AND PRIVATE HYDRANTS SHALL BE PAINTED WHITE WITH AN OIL-BASED PAINT.
2. FIRE HYDRANT SHALL BE INSTALLED 2' MIN. AND 4' MAX. FROM BACK OF CURB OR 6' MIN. AND 12' MAX. FROM EDGE OF PAVEMENT WHEN CURB IS NOT PRESENT. FIRE HYDRANT TO BE INSTALLED WITHIN RIGHT-OF-WAY OR EASEMENT LINE.
3. AREA AROUND HYDRANT AT A RADIUS OF 4' TO BE LEVEL AND UNOBSTRUCTED.
4. WATERPROOF BAGS OR CUT OF SERVICE RINGS SHALL BE PLACED OVER ALL NEWLY INSTALLED FIRE HYDRANTS.
5. HIGH PRESSURE (OVER 120 PSI) REQUIRES THE USE OF ALL 3 RESTRAINTS.
6. IF DURING CONSTRUCTION THE SEASONAL WATER LEVEL IS NOTED TO BE ABOVE THE DRAIN OUTLETS OF THE PROPOSED HYDRANT, THE PARTICIPATING UTILITY WILL BE NOTIFIED IMMEDIATELY SO THAT THE HYDRANT CAN BE RELOCATED TO A SUITABLE LOCATION, OMITTED, OR THE DRAIN HOLE PLUGGED.
7. TWO WRAPS OF TRACER WIRE SHALL BE WRAPPED AROUND BASE OF HYDRANT.
8. APPROVED MODELS - AVK MODEL 2780, AFC MODEL B-84-B-5, MUELLER CENTURION A423, KENNEDY K81D EQUIVALENT.

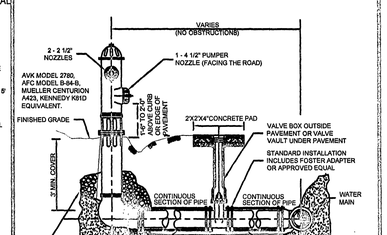

WESTERN VIRGINIA REGIONAL – CONSTRUCTION DETAIL

FIRE HYDRANT ASSEMBLY — W-17 — 01/01/12

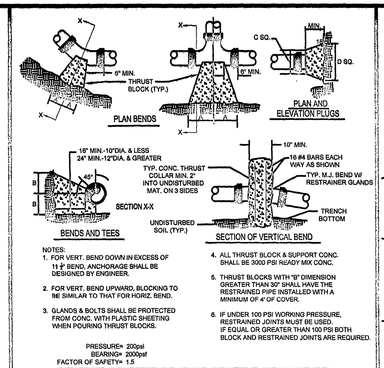

NOTES:
1. FOR VERT. BEND DOWN IN EXCESS OF 11.9° BEND, ANCHORAGE SHALL BE DESIGNED BY ENGINEER.
2. FOR VERT. BEND UPWARD, BLOCKING TO BE SIMILAR TO THAT FOR HORIZ. BEND.
3. GLANDS & BOLTS SHALL BE PROTECTED FROM CONC. WITH PLASTIC SHEETING WHEN POURING THRUST BLOCKS.
4. ALL THRUST BLOCK & SUPPORT CONC. SHALL BE 3000 PSI READY MIX CONC.
5. THRUST BLOCKS WITH "B" DIMENSION GREATER THAN 30" SHALL HAVE THE RESTRAINED PIPE INSTALLED WITH A MINIMUM OF 4' OF COVER.
6. IF UNDER 100 PSI WORKING PRESSURE, RESTRAINED JOINTS MUST BE USED. IF EQUAL OR GREATER THAN 100 PSI BOTH BLOCK AND RESTRAINED JOINTS ARE REQUIRED.

PRESSURE= 200psi
BEARING= 2000psf
FACTOR OF SAFETY= 1.5

PIPE SIZE	90° BEND			45° BEND			22 1/2° BEND			11 1/4° BEND			TEE		PLUG	
	A	B	C	A	B	C	A	B	C	A	B	C	A	B	C	B
4"	8"	8"	8"	8"	8"	8"	8"	8"	8"	8"	8"	8"	11"	8"	10"	8"
6"	18"	12"	8"	10"	8"	8"	9"	8"	8"	9"	8"	8"	11"	10"	12"	16"
8"	18"	13"	10"	10"	8"	8"	9"	8"	8"	9"	11"	10"	12"	12"	12"	24"
10"	20"	16"	12"	12"	8"	8"	9"	8"	8"	9"	12"	12"	12"	12"	16"	30"
12"	20"	17"	12"	14"	8"	8"	10"	8"	8"	12"	14"	16"	16"	16"	18"	36"
16"	20"	21"	12"	18"	11"	10"	11"	11"	10"	11"	18"	20"	20"	20"	20"	50"
20"	22"	27"	12"	20"	44"	22"	22"	20"	10"	22"	42"	10"	42"	10"	42"	70"
24"	1.55"	1.55"	12"	1.00"	42"	22"	22"	42"	10"	1.55"	42"	42"	1.55"	42"	1.55"	42"

WESTERN VIRGINIA REGIONAL – CONSTRUCTION DETAIL

THRUST BLOCK REQUIREMENTS — W-18 — 01/01/12

1. TRAFFIC BEARING BOX AND LID REQUIRED IN TRAFFIC AREAS (CAPITOL FOUNDRY VB-P6).
2. ALL PIPE AND FITTINGS SHALL BE OF SIMILAR MATERIAL.
3. ALL PIPE SHALL BE OF SAME SIZE.
4. NO BENDS ARE ALLOWED IN THE LATERAL FROM THE MAIN TO THE CLEANOUT STACK TEE. (EXCEPT FOR DEEP SEWER, AS SHOWN BELOW)
5. ALL MAIN LINE TAPS ON ACTIVE MAINS SHALL BE PERFORMED BY PARTICIPATING UTILITY.
6. PIPING ON PRIVATE SIDE OF CLEANOUT TO BE INSTALLED PER GOVERNING JURISDICTION REQUIREMENTS.
7. MINIMUM LATERAL SIZE- 4" FOR RESIDENTIAL SERVICE, 6" FOR NON-RESIDENTIAL SERVICE
8. MINIMUM COVER FOR ALL SEWER LATERALS SHALL BE THREE (3) FEET.
9. PROPERTY OWNER RESPONSIBLE FOR INSTALLING CLEANOUT ON PROPERTY LINE (IN ACCORDANCE WITH THIS DETAIL) WHEN MAINTENANCE OCCURS.
10. LOWEST SERVED FINISHED FLOOR ELEVATION SHALL BE A MINIMUM OF THREE FEET (3) ABOVE THE TOP OF THE MAIN AT THE POINT WHERE THE SEWER LATERAL CONNECTS TO THE MAIN.
11. WHEN CONNECTING TO EXISTING LATERAL USE FERNCO FLEXIBLE COUPLING.

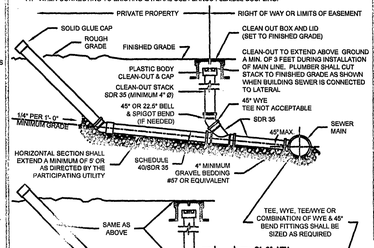

WESTERN VIRGINIA REGIONAL – CONSTRUCTION DETAIL

SANITARY SEWER LATERAL — S-6 — 01/01/12

1. TRACER WIRES SHALL BE INSTALLED USING MANHOLES, VALVE BOXES OR VAULTS, WATER METERS AND FIRE HYDRANTS AS ACCESS POINTS.
2. FOR WATER OR SEWER INSTALLED BY OPEN TRENCHING, TRACER WIRE SHALL BE COPPERHEAD INDUSTRIES COPPER CLAD STEEL DIRECT BURY #14 AWG SOLID (.0641" DIAMETER), STEEL CORE SOFT DRAWN HIGH STRENGTH TRACER WIRE, 250# AVERAGE TENSILE BREAK LOAD, 30 MIL HIGH MOLECULAR WEIGHT-HIGH DENSITY (GREEN OR BLUE) POLYETHYLENE JACKET COMPLYING WITH ASTM-D-1248, 30 VOLT RATING. A HEAVIER GAUGE MAY BE REQUIRED FOR DEPTHS EXCEEDING SIX FEET.
3. FOR WATER OR SEWER INSTALLED BY HORIZONTAL DIRECTIONAL DRILLING METHOD, TRACER WIRE SHALL BE COPPERHEAD INDUSTRIES COPPER CLAD STEEL DIRECT BURY #12 AWG SOLID (.0808" DIAMETER), STEEL CORE HARD DRAWN EXTRA HIGH STRENGTH HORIZONTAL DIRECTIONAL DRILL TRACER WIRE, 1150# AVERAGE TENSILE BREAK LOAD, 45 MIL HIGH MOLECULAR WEIGHT-HIGH DENSITY (GREEN OR BLUE) POLYETHYLENE JACKET COMPLYING WITH ASTM-D-1248, 30 VOLT RATING.
4. SPLICES SHALL BE MADE USING COPPERHEAD INDUSTRIES SNAKE BITE SPLICE KIT PART #SCX-01, OF THE APPROPRIATE COLOR, 3M DIRECT BURY SPLICE KIT (DBY), OR EQUIVALENT.
5. TRACER WIRE SHALL BE LONG ENOUGH TO EXTEND A DISTANCE OF FIVE (5) FEET BEYOND THE STRUCTURE.
6. AS-BUILTS SHALL SHOW TRACER WIRE(S) LOCATION AND ACCESS POINT(S).
7. THE TRACER WIRE SHALL BE PLACED ALONG THE LOWER QUADRANT OF THE PIPE. THE WIRE SHALL NOT TOUCH THE PIPE, BUT SHALL BE A MAXIMUM OF 6" FROM THE PIPE. NON-METALLIC SPACERS MAY BE USED TO MAINTAIN A SET DISTANCE FROM THE UTILITY.
8. WHERE LINES ARE GREATER THAN SIX (6) FEET IN DEPTH, WIRE SHALL BE BROUGHT TO THE SURFACE EVERY ONE-HUNDRED (100) FEET AND PLACED IN A WATER METER BOX OR APPROVED JUNCTION BOX.
9. THE TRACER WILL BE TESTED BY THE PARTICIPATING UTILITY AS PART OF THE PROJECT'S FINAL ACCEPTANCE.
10. THE GROUND WIRE SHALL BE #6 GAUGE COPPER WIRE AND SHALL BE OF ADEQUATE LENGTH TO EXTEND A MINIMUM OF FIVE (5) FEET BEYOND THE TOP OF STRUCTURE. THE END OF GROUND WIRE SHALL CONNECT TO THE GROUND BAR USING A BURNDY KARU MECHANICAL CABLE LUG.
11. A GROUND ROD SHALL BE INSTALLED AT EACH LOCATION WHERE GROUND WIRE SURFACES AND CONNECTS TO GROUND BAR. GROUND ROD SHALL BE COPPER COATED, MINIMUM DIAMETER OF 5/8", AND SHALL BE BURIED A MINIMUM OF FOUR (4) FEET INTO THE GROUND.
12. THE GROUND BAR SHALL BE STAINLESS STEEL AND SHALL BE ATTACHED USING SS 1/4" X 1 1/4" SS HEX TAPCON. THE FOLLOWING SHALL BE INSTALLED IN 4 (FOUR) CENTER HOLES: 10-32 SS NUTS, #10 SS WASHERS AND 10-32 X 3/4 SS PHILLIPS. THE FOURTH HOLE SHALL HAVE A BURNDY CONNECTOR KABU FOR THE #8 GAUGE GROUND WIRE. THE ASSEMBLY CAN BE ACQUIRED AT MAGIC CITY SUPPLY - CLAMP R/C-11. THE ENDS OF THE TRACER WIRES SHALL BE PLACED IN THE GROUND BAR AS SHOWN.
13. TWO WRAPS OF TRACER WIRE SHALL BE WRAPPED SNUGGLY AROUND BASE OF HYDRANT. WIRE SHALL NOT BE LEFT IN A WAY THAT WOULD INTERFERE WITH MOWING AROUND HYDRANT.

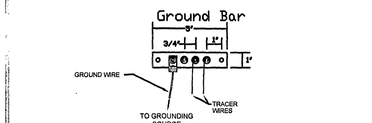

WESTERN VIRGINIA REGIONAL – CONSTRUCTION DETAIL

TRACER WIRE FOR NON-METALLIC PRESSURE PIPE — G-4 — 01/01/12

1. WHEN WATER LINE IS LOCATED BELOW A SEWER LINE, THE SEWER LINE IS TO BE ENCASED ALONG ITS LENGTH WHERE IT IS WITHIN 10' OF WATER LINE.
2. WATER AND SEWER LINES CROSSING STREAMS MUST BE CONCRETE ENCASED.

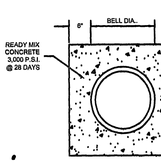

WESTERN VIRGINIA REGIONAL – CONSTRUCTION DETAIL

CONCRETE ENCASED PIPE — G-9 — 01/01/12

1. MATERIALS AND FABRICATION IN ACCORDANCE WITH ASTM C478-09.
2. WHEN USED AS SAMPLING MANHOLE FLOW SHALL PASS STRAIGHT THROUGH, i.e., 180°.
3. STEPS SHALL BE VERTICALLY ALIGNED. FIRST STEP SHALL BE WITHIN 12" OF COVER, BOTTOM STEP SHALL BE WITHIN 24" OF BOTTOM OF MANHOLE.
4. FRAME AND COVER SHALL BE PROPERLY ALIGNED WITH THE 2 FOOT OPENING OF THE MANHOLE STRUCTURE AND BOLTED IN PLACE.
5. FLAT TOP MANHOLES MAY ONLY BE SUBSTITUTED WITH THE PERMISSION OF THE PARTICIPATING UTILITY.
6. FLEXIBLE JOINT MANHOLE CONNECTION SHALL BE AS MANUFACTURED BY PRES-SEAL GASKET CORPORATION OR EQUAL.
7. GROUT ANNULAR SPACE BETWEEN PIPE AND PRECAST MANHOLE ON INSIDE OF MANHOLE.
8. WHEN REPLACING AN EXISTING MANHOLE OR INSTALLING A NEW PRECAST MANHOLE ON AN EXISTING SEWER, A MINIMUM OF SIX FEET (6) OF EXISTING PIPE SHALL BE REMOVED AND REPLACED WITH NEW MATERIAL ON INLET AND OUTLET OF MANHOLE.
9. MANHOLES WHERE THE INVERT IS LOWER THAN THE NORMAL GROUNDWATER ELEVATION (i.E., ALONG CREEKS, RIVERS, LOW-LYING AREAS, ETC.) SHALL HAVE A FULL EXTERIOR COATING AND JOINT WRAP APPLIED IN ADDITION TO JOINT SEALANT. SEE NOTES 10 & 11.
10. IF REQUIRED EXTERIOR VERTICAL WALL SURFACES SHALL BE FACTORY COATED IN ACCORDANCE WITH THE MANUFACTURERS RECOMMENDATION. COATING SHALL BE HIGH BUILD COAL TAR EPOXY MEETING ASTM D1227. COATING SHALL BE APPLIED IN TWO COATS TO A MINIMUM TOTAL THICKNESS OF 16 MILS.
11. IF REQUIRED ALL MANHOLES SHALL UTILIZE AN EXTERNAL FRAME AND JOINT SEAL AT ALL JOINTS AND AT THE FRAME/CHIMNEY INTERFACE. SEAL SHALL BE MADE OF EPDM RUBBER IN ACCORDANCE WITH ASTM D412 OR POLYOLEFIN BACKED EXTERIOR JOINT WRAP IN ACCORDANCE WITH ASTM E-1745, C-877, AND C-990. EDM SEAL SHALL HAVE A MINIMUM THICKNESS OF 60 MILS. POLYOLEFIN BACKED EXTERIOR JOINT WRAP SHALL HAVE A BACKING BAND ELEMENT WITH MINIMUM THICKNESS OF 4 MILS. AND BUTYL ROLLER ADHESIVE WITH MINIMUM THICKNESS OF 60 MILS. SEAL SHALL AGGRESSIVELY BOND TO CONCRETE AND METAL STRUCTURES.
12. FOR PIPE LARGER THAN 15 INCHES IN DIAMETER THE MINIMUM INSIDE DIAMETER OF THE MANHOLE SHALL BE IN ACCORDANCE WITH MANUFACTURERS RECOMMENDATIONS BASED ON PIPE SIZE AND ANGLE BETWEEN INLET AND OUTLET PIPING.

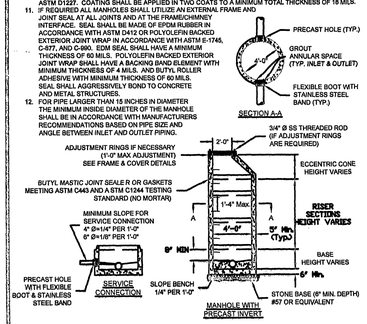

WESTERN VIRGINIA REGIONAL – CONSTRUCTION DETAIL

4' STANDARD MANHOLE FOR PIPE 15" OR SMALLER (FOR DEPTHS UP TO 15 FEET) — S-1 — 01/01/12

1. WATERTIGHT MANHOLE FRAME MODEL #10452 BY EAST JORDAN IRON WORKS, INC. OR EQUIVALENT.
2. HDPE ADJUSTMENT RINGS SHALL MEET H-20 LOAD RATING, AND SHALL BE INTERLOCKING OR UTILIZE BUTYL MASTIC JOINT SEALANT BETWEEN EACH RING TO FORM A WATERTIGHT JOINT.
3. CONCRETE ADJUSTMENT RINGS SHALL MEET H-20 LOAD RATING AND UTILIZE BUTYL MASTIC JOINT SEALANT BETWEEN EACH RING AND FRAME AN COVER TO FORM A WATERTIGHT JOINT.
4. FRAME HEIGHT SHALL BE 7" FOR BURIED LOCATIONS AND 4" FOR EXPOSED LOCATIONS.

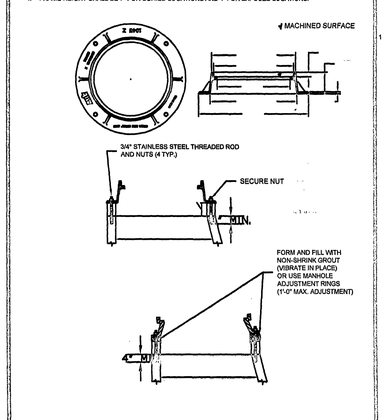

WESTERN VIRGINIA REGIONAL – CONSTRUCTION DETAIL

WATERTIGHT MANHOLE FRAME — S-4 — 01/01/12

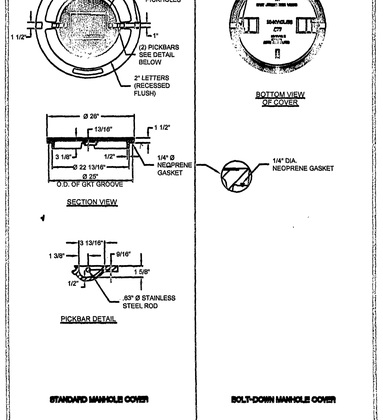

WESTERN VIRGINIA REGIONAL – CONSTRUCTION DETAIL

WATERTIGHT MANHOLE COVER — S-5 — 01/01/12

1. BEDDING, HAUNCHING AND INITIAL BACKFILL CONSTRUCTION SHALL BE IN ACCORDANCE WITH THIS DETAIL AND MANUFACTURER'S RECOMMENDATION.
2. ALL PVC PIPE SHALL BE BEDDED IN COMPACTED VDOT #57 OR #68 STONE, OR CRUSHER RUN.
3. IN AREAS SUBJECTED TO VEHICULAR TRAFFIC, BEDDING STONE AND FILL SHALL BE PLACED IN 6" LIFTS FROM BOTTOM OF TRENCH TO 1' ABOVE THE PIPE AND THE REMAINING SHALL BE PLACED IN 10" LIFTS AND SHALL BE COMPACTED TO AT LEAST 90% OF MAXIMUM DENSITY AS DETERMINED BY ASTM D 698.
4. BEDDING REQUIREMENTS FOR DUCTILE IRON WATER LINE ARE DEPENDENT ON MANUFACTURER'S BEDDING CRITERIA.
5. ALL EXCAVATIONS SHALL COMPLY WITH OSHA TECHNICAL MANUAL, CHAPTER 2, TITLED "EXCAVATIONS: HAZARD RECOGNITION IN TRENCHING AND SHORING."
6. THE TRACER WIRE SHALL BE PLACED ALONG THE LOWER QUADRANT OF THE PIPE. THE WIRE SHALL NOT TOUCH THE PIPE, BUT SHALL BE A MAXIMUM OF 6" FROM THE PIPE. NON-METALLIC SPACERS MAY BE USED TO MAINTAIN A SET DISTANCE FROM THE UTILITY.

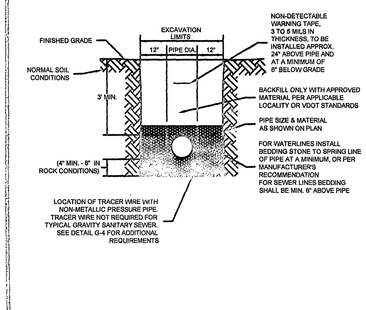

WESTERN VIRGINIA REGIONAL – CONSTRUCTION DETAIL

BEDDING AND BACKFILL OUTSIDE OF PAVED AREAS — G-11 — 01/01/12

1. BEDDING, HAUNCHING AND INITIAL BACKFILL CONSTRUCTION SHALL BE IN ACCORDANCE WITH THIS DETAIL AND MANUFACTURER'S RECOMMENDATION.
2. ALL PVC PIPE SHALL BE BEDDED IN COMPACTED VDOT #57 OR #68 STONE, OR CRUSHER RUN.
3. IN VDOT ROW, THE CONTRACTOR SHALL REPLACE THE OPEN CUT WITH A MINIMUM TOP COURSE OF 1.5" (MINIMUM) VDOT SM-9.5A, BASE COURSE OF 6" VDOT SM-25.0 AND ASBMACE OF 10" VDOT 21B, OR AS REQUIRED BY VDOT. IN ROANOKE CITY, CONTRACTOR SHALL REPLACE PAVEMENT AS REQUIRED BY CITY OF ROANOKE RIGHT OF WAY EXCAVATION AND RESTORATION STANDARDS, LATEST EDITION.
4. ALL CONSTRUCTION WITHIN THE PUBLIC RIGHT-OF-WAY SHALL BE AS SPECIFIED BY VDOT OR APPLICABLE LOCALITY.
5. PRIOR TO CONSTRUCTION, CONTRACTOR IS RESPONSIBLE FOR SECURING ALL REQUIRED PERMITS FROM VDOT AND/OR APPLICABLE LOCALITY.
6. IN AREAS SUBJECTED TO VEHICULAR TRAFFIC, BEDDING STONE AND FILL SHALL BE PLACED IN 6" LIFTS AND SHALL BE COMPACTED TO AT LEAST 95% OF MAXIMUM DENSITY AS DETERMINED BY ASTM D 698.
7. ALL SEWER LINE PIPE SHALL BE BEDDED IN COMPACTED GRANULAR MATERIAL. BEDDING REQUIREMENTS FOR DUCTILE SEWER LINE ARE DEPENDENT ON MANUFACTURER'S BEDDING CRITERIA.
8. BENCHCUT ON EACH SIDE OF PAVEMENT: CITY OF ROANOKE = 12", VDOT RIGHT-OF-WAY = 6".
9. ALL EXCAVATIONS SHALL COMPLY WITH OSHA TECHNICAL MANUAL, CHAPTER 2, TITLED "EXCAVATIONS: HAZARD RECOGNITION IN TRENCHING AND SHORING."
10. THE TRACER WIRE SHALL BE PLACED ALONG THE LOWER QUADRANT OF THE PIPE. THE WIRE SHALL NOT TOUCH THE PIPE, BUT SHALL BE A MAXIMUM OF 6" FROM THE PIPE. NON-METALLIC SPACERS MAY BE USED TO MAINTAIN A SET DISTANCE FROM THE UTILITY.

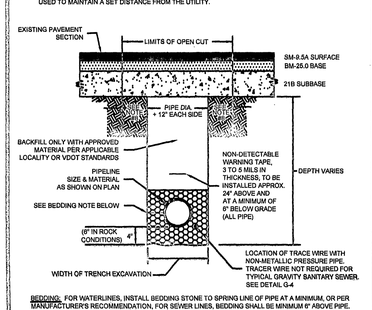
EXISTING PAVEMENT SECTION
LIMITS OF OPEN CUT
SM-9.5A SURFACE
BM-25.0 BASE
21B SUBBASE
PIPE DIA. + 12" EAC