1. TRACER WIRES SHALL BE INSTALLED USING MANHOLES, TRACER WIRE ACCESS BOXES, VALVE BOXES OR VAULTS, WATER METERS AND FIRE HYDRANTS AS ACCESS POINTS
2. FOR WATER AND SEWER PIPES BY OPEN TRENCH RING, HORIZONTAL DIRECTIONAL DRILLING, OR PIPE BURSTING, TRACER WIRE SHALL BE NEXTTO TRACER SAFE WATER BLOCKING TRACER WIRE OR APPROVED EQUAL.
3. SPLICES SHALL ONLY BE MADE WITH GRI PELRO CONNECTORS DESIGNED FOR WIRE WITH A WOVEN POLYESTER FIBER CORE WITH THE MANUFACTURER'S TRACE-SAFE WATER BLOCKING CONNECTORS OR APPROVED EQUAL. SPLICES SHALL BE MADE IN ACCORDANCE WITH THE MANUFACTURER'S INSTALLATION INSTRUCTIONS. CONTRACTOR WILL BE RESPONSIBLE FOR ENSURING CONTINUITY AT ALL SPLICE LOCATIONS.
4. WHERE PIPE PIPE IS INSTALLED WITHOUT STEEL CASING PIPE, SUCH AS A DIRECTIONALLY DRILLED CROSSINGS, AND CONNECTED TO DUCTILE IRON PIPE ON EACH END, TRACER WIRE SHALL BE INSTALLED ALONG FULL LENGTH OF HDPE PIPE WITH AN ACCESS POINT INSTALLED AT EACH HDPE/DUCTILE IRON TRANSITION. TRACER WIRE SHALL BE CONNECTED TO THE ACCESS POINT IN ACCORDANCE WITH THIS DETAIL. ANY TRANSITION FROM DUCTILE IRON MAIN TO NON-DUCTILE IRON MAIN SHALL HAVE AN ACCESS POINT TO BEGIN TRACER WIRE.
5. ACCESS POINTS SHALL INCLUDE LOCATION AND ACCESS POINT(S) ALONG WITH BUT SPLICE LOCATIONS
6. THE TRACER WIRE SHALL BE PLACED ALONG THE LOWER QUADRANT OF THE PIPE. THE WIRE SHALL NOT TOUCH THE PIPE, BUT SHALL BE A MAXIMUM OF 6" FROM THE PIPE. NON-METALLIC SPACERS MAY BE USED TO MAINTAIN A SET DISTANCE FROM THE UTILITY.
7. WIRE SHALL BE BROUGHT TO THE SURFACE EVERY EVEN-NUMBERED (2ND) FIRE HYD PLACED IN A WATER METER BOX OR A GRAVINGS & WATER SOLUTIONS, INC. OR APPROVED EQUAL ALL CAST IRON FITTINGS. THE WIRE SHALL NOT TOUCH THE PIPE, BUT SHALL BE A MAXIMUM OF 6" FROM THE PIPE. NON-METALLIC SPACERS MAY BE USED TO MAINTAIN A SET DISTANCE FROM THE UTILITY.
8. THE TRACER WIRE SHALL BE TESTED BY THE PARTICIPATING UTILITY AS PART OF THE PRESSURE FINAL ACCEPTANCE. CONTRACTOR WILL BE RESPONSIBLE FOR ANY REPAIRS TO THE TRACER WIRE.
9. THE GROUND WIRE SHALL BE AN ALL CONTINUOUS PIECE OF WIRE. THE GROUND WIRE SHALL BE OF ADEQUATE LENGTH TO EXTEND A MINIMUM OF 20 FEET BEYOND THE TOP OF THE STRUCTURE. THE END OF THE GROUND WIRE SHALL CONNECT TO THE GROUND BAR OR LID TERMINAL USING A SURNOY 10460 MECHANICAL TERMINAL LUG.
10. A GROUND ROD SHALL BE INSTALLED AT EACH LOCATION WHERE GROUND WIRE SUBPADS AND CONNECTS TO GROUND BAR. GROUND ROD SHALL BE COPPER COATED WITH A MINIMUM DIAMETER OF 3/8" AND SHALL BE BURIED A MINIMUM OF FOUR (4) FEET INTO THE GROUND.
11. THE GROUND BAR SHALL BE STAINLESS STEEL AND SHALL BE ATTACHED USING (6) 2" X 1/4" (6) HEX TAPCON. THE FOLLOWING SHALL BE INSTALLED IN (6) FOUR CENTER HOLES: 10-32862 NUTS, #10 SS WASHERS AND 10-32 X (6) PHILLIPS. THE FOURTH HOLE SHALL HAVE A SURNOY 10460 MECHANICAL TERMINAL LUG FOR THE #6 AWG GROUND WIRE. THE ASSEMBLY CAN BE ACQUIRED AT ROD INDUSTRIAL SUPPLY, INC. (540-343-0882) - CLAMP KIT-11H. THE SIZES OF THE TRACER WIRES SHALL BE PLACED IN THE ACCESS BOX AS SHOWN BELOW.
12. IF LINKED TRACER WIRE ACCESS BOX AS ACCESS POINT, GROUND BAR WILL NOT BE REQUIRED. WIRES SHALL BE CONNECTED AS SHOWN BELOW. TRACER WIRE SHALL BE OF ADEQUATE LENGTH TO EXTEND FIVE (5) FEET ABOVE THE TOP OF ACCESS BOX.
13. TWO WRAPS OF TRACER WIRE SHALL BE WRAPPED SNUGLY AROUND BASE OF HYDRANT. WIRE SHALL NOT BE LEFT IN A WAY THAT WOULD INTERFERE WITH MOWING AROUND HYDRANT.
14. WHEN USING ALL DUCTILE MAIN, TRACER WIRE FOR SERVICES SHALL BE 12 AWG COPPER TRACER WIRE. TRACER WIRE SHALL HAVE BARE WIRE CONTACT TO DUCTILE MAIN.

BLUE = TRACE SAFE TRACER WIRE
BLACK = GROUND WIRE & GROUND BAR
TS19-IL-LC-C = TRACE SAFE LOCATING CLIP AT GROUND BAR
TS19-C = SERVICE LATERAL TRACE SAFE CONNECTOR
GROUND WIRE = #6 AWG COPPER WIRE
NOTE: LEAVE FIVE FEET (5') OF EXCESS TRACER WIRE COILED UP IN VAULT

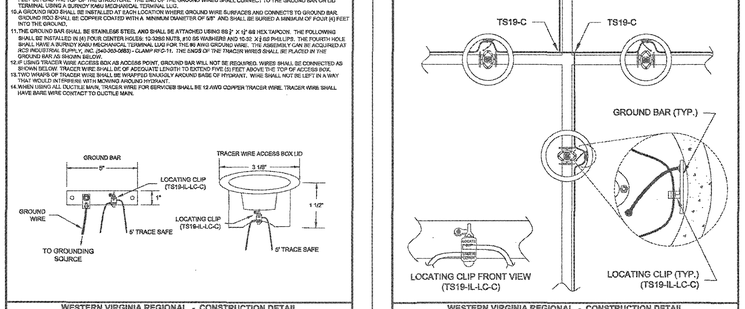

WESTERN VIRGINIA REGIONAL - CONSTRUCTION DETAIL

TRACER WIRE
FOR NON-METALLIC
PRESSURE PIPE — 09/30/15 — G-4

WESTERN VIRGINIA REGIONAL - CONSTRUCTION DETAIL

TRACER WIRE SAMPLE
TEE/CROSS INTERSECTION — 09/06/16 — G-4A

1. A 1" DRAIN WILL BE REQUIRED ON THE LOWER END OF THE CASING PIPE.
2. SPACERS SHALL BE RACI HDPE SPACERS OR EQUIVALENT. STAINLESS STEEL SPACERS MAY BE USED IF IN COMPLIANCE WITH THE FOLLOWING CRITERIA:
   - INTERIOR SURFACES OF THE CIRCULAR STAINLESS STEEL BAND SHALL BE LINED WITH EPDM OR NEOPRENE MATERIAL.
   - ABRASION RESISTANT RUNNERS/SKIDS SHALL BE POLYMER MATERIAL WITH EACH END BEVELED TO FACILITATE EASE OF INSTALLATION INTO CASING PIPE.
3. SPACERS SHALL BE SPACED 8 1/2' ON SEWER PIPE.
4. CARRIER PIPE SHALL BE DUCTILE OR HDPE IN ACCORDANCE WITH REGIONAL STANDARDS.
5. 8" HDPE CARRIER PIPE SHALL BE USED WHEN PRESSURE GRADES ARE NOT REQUIRED THROUGH CASING. SPACERS MAY BE OMITTED.
6. CASING PIPE TO BE STEEL IN ACCORDANCE WITH VDOT STANDARD DETAIL EP-1 OR HDPE AS SPECIFIED IN THE STANDARDS IF APPROVED BY THE PARTICIPATING UTILITY.
7. CONCRETE CASING PIPE WILL NOT BE ALLOWED.
8. DIAMETER OF CASING PIPE SHALL BE AS SHOWN IN THE TABLE BELOW UNLESS OTHERWISE SPECIFIED BY THE PARTICIPATING UTILITY. WHERE SPACERS ARE NOT REQUIRED, CASING PIPE SHALL BE MINIMUM DIAMETER TO ADEQUATELY INSTALL AND PASS CARRIER PIPE THROUGH AND TO MINIMIZE VOID SPACE BETWEEN CARRIER AND CASING PIPES.

CASING PIPE SIZE CHART

CARRIER PIPE (NOMINAL DIAMETER)	CASING PIPE (DIAMETER)
6"	12"
8"	18"
10"	24"
12"	24"
14"	24"
16"	30"
18"	30"
24"	42"
30"	42"

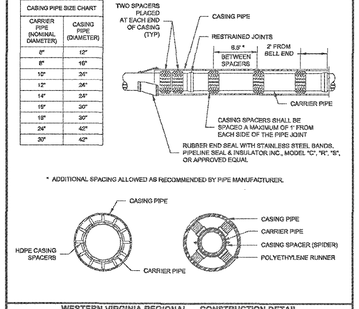

WESTERN VIRGINIA REGIONAL - CONSTRUCTION DETAIL

PIPE SUPPORT
IN CASING PIPE — 05/30/15 — G-6

1. PIER REQUIRED WHEN STORM DRAIN OR OTHER PIPES CROSSES OVER THE OTHER UTILITY WITH A VERTICAL CLEARANCE OF LESS THAN 18".
2. PIER TO BE BUILT ON UNDISTURBED EARTH.
3. CONCRETE TO BE READY MIX, CLASS A3.

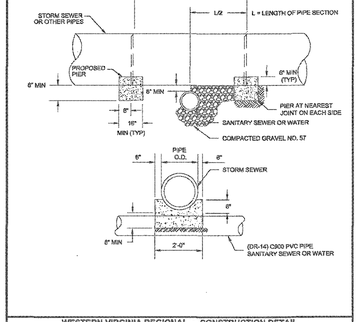

WESTERN VIRGINIA REGIONAL - CONSTRUCTION DETAIL

CONCRETE PIER — 01/01/14 — G-8

1. BEDDING, HAUNCHING AND INITIAL BACKFILL CONSTRUCTION SHALL BE IN ACCORDANCE WITH THIS DETAIL AND MANUFACTURERS RECOMMENDATION.
2. ALL PVC PIPE SHALL BE BEDDED IN COMPACTED VDOT #57 OR #68 STONE, OR CRUSHER RUN.
3. IN AREAS SUBJECTED TO VEHICULAR TRAFFIC, BEDDING STONE AND FILL SHALL BE PLACED IN 8" LIFTS FROM BOTTOM OF TRENCH TO 1' ABOVE THE PIPE AND THE REMAINING SHALL BE PLACED IN 10" LIFTS AND SHALL BE COMPACTED TO AT LEAST 90% OF MAXIMUM DENSITY AS DETERMINED BY ASTM D 698.
4. BEDDING REQUIREMENTS FOR DUCTILE IRON WATER LINE ARE DEPENDENT ON MANUFACTURER'S BEDDING CRITERIA.
5. ALL EXCAVATIONS SHALL COMPLY WITH OSHA TECHNICAL MANUAL, CHAPTER 2, TITLED "EXCAVATIONS: HAZARD RECOGNITION IN TRENCHING AND SHORING".
6. THE TRACER WIRE SHALL BE PLACED ALONG THE LOWER QUADRANT OF THE PIPE. THE WIRE SHALL NOT TOUCH THE PIPE, BUT SHALL BE A MAXIMUM OF 6" FROM THE PIPE. NON-METALLIC SPACERS MAY BE USED TO MAINTAIN A SET DISTANCE FROM THE UTILITY.

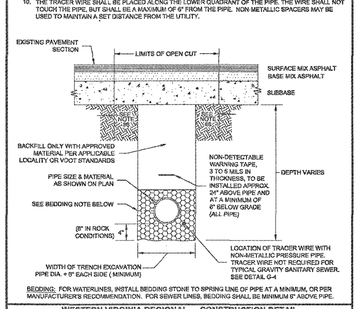

WESTERN VIRGINIA REGIONAL - CONSTRUCTION DETAIL

BEDDING AND BACKFILL
OUTSIDE OF PAVED AREAS — 08/01/15 — G-11

1. BEDDING, HAUNCHING AND INITIAL BACKFILL CONSTRUCTION SHALL BE IN ACCORDANCE WITH THIS DETAIL AND MANUFACTURERS RECOMMENDATION.
2. ALL PVC PIPE SHALL BE BEDDED IN COMPACTED VDOT #57 OR #68 STONE.
3. IN ROAD ROW, THE CONSTRUCTION SHALL REPLACE THIS PAVEMENT AS REQUIRED BY CITY OF ROANOKE RIGHT OF WAY EXCAVATION AND RESTORATION STANDARDS, LATEST EDITION.
4. ALL CONSTRUCTION WITHIN THE PUBLIC RIGHT-OF-WAY SHALL BE AS SPECIFIED BY VDOT OR APPLICABLE LOCALITY.
5. PRIOR TO CONSTRUCTION, CONTRACTOR IS RESPONSIBLE FOR SECURING ALL REQUIRED PERMITS FROM VDOT AND/OR APPLICABLE LOCALITY.
6. IN AREAS SUBJECTED TO VEHICULAR TRAFFIC, BEDDING STONE AND FILL SHALL BE PLACED IN 6" LIFTS AND SHALL BE COMPACTED TO AT LEAST 95% OF MAXIMUM DENSITY AS DETERMINED BY ASTM D 698.
7. ALL SEWER LINE PIPE SHALL BE BEDDED IN COMPACTED GRANULAR MATERIAL. BEDDING REQUIREMENTS FOR DUCTILE SEWER LINE ARE DEPENDENT ON MANUFACTURER'S BEDDING CRITERIA.
8. BENCH CUT ON EACH SIDE OF TRENCH FOR BACKFILL IN ACCORDANCE WITH VDOT OR APPLICABLE LOCALITY'S SPECIFICATIONS.
9. ALL EXCAVATIONS SHALL COMPLY WITH OSHA TECHNICAL MANUAL, CHAPTER 2, TITLED "EXCAVATIONS: HAZARD RECOGNITION IN TRENCHING AND SHORING".
10. THE TRACER WIRE SHALL BE PLACED ALONG THE LOWER QUADRANT OF THE PIPE. THE WIRE SHALL NOT TOUCH THE PIPE, BUT SHALL BE A MAXIMUM OF 6" FROM THE PIPE. NON METALLIC SPACERS MAY BE USED TO MAINTAIN A SET DISTANCE FROM THE UTILITY.

BEDDING: FOR WATERLINES, INSTALL BEDDING STONE TO SPRING LINE OF PIPE AT A MINIMUM, OR PER MANUFACTURERS RECOMMENDATION. FOR SEWER LINES, BEDDING SHALL BE MINIMUM 6" ABOVE PIPE.

WESTERN VIRGINIA REGIONAL - CONSTRUCTION DETAIL

BEDDING AND BACKFILL
UNDER PAVEMENT AND IN RIGHT-OF-WAY — 08/01/15 — G-12

1. SETTER TO BE A.Y. McDONALD 728-216MDD03S, FORD VBH972-16W-11-33 OR APPROVED EQUAL.
2. SADDLES MUST BE USED WITH ALL PLASTIC & DUCTILE IRON PIPE. SERVICE SADDLES SHALL BE USED IN ACCORDANCE WITH WATER DISTRIBUTION PIPING SPECIFICATION. SERVICE SADDLES FOR PLASTIC PIPE SHALL BE POWERSEAL 3417, OR 3412AS, ROMAC 202S, CR 306, OR FORD METER FS202 OR FS203. FOR DUCTILE IRON PIPE USE THE ABOVE OR POWERSEAL 3413, ROMAC 202 OR FORD METER FS02.
3. METER BOX SHALL BE CARSONITE-STATES PLASTICS, INC. PLASTIC BOX WITH FORD "A" DOMESTIC SERIES FRAME WITH A NICOR DOMESTIC 12.25 CX LID WITH SENSUS RECESS, ADS CORRUGATED HDPE BOX WITH FORD "A" DOMESTIC SERIES FRAME WITH A NICOR DOMESTIC 12.25 CX LID WITH SENSUS RECESS OR APPROVED EQUAL. METER BOX SHALL NOT BE PLACED IN AREAS SUBJECT TO VEHICULAR TRAFFIC. IF TRAFFIC BEARING BOX IS REQUIRED, DESIGN ENGINEER SHALL CONSULT WITH PARTICIPATING UTILITY TO DETERMINE SITE SPECIFIC REQUIREMENTS.
4. CORPORATION STOP SHALL BE FORD FB1000-4-G-NL, MUELLER B-25008 OR APPROVED EQUAL.
5. SERVICE SHALL BE "K" TYPE COPPER, OR COPPER TUBE SIZE POLYETHYLENE (PE) 4710, SCDR-9 (200 psi).
6. WHENEVER SIDEWALK EXISTS OR IS PROPOSED, MODIFY METER LOCATION AS DIRECTED.

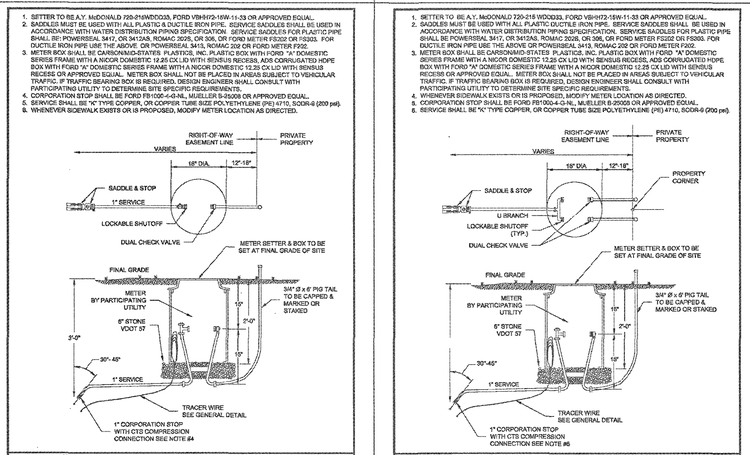

WESTERN VIRGINIA REGIONAL - CONSTRUCTION DETAIL

SINGLE RESIDENTIAL
WATER SERVICE - (NEW DEVELOPMENT)
(LINE PRESSURE UNDER 120 PSI) — 05/09/17 — W-1

WESTERN VIRGINIA REGIONAL - CONSTRUCTION DETAIL

DOUBLE RESIDENTIAL
WATER SERVICE
(LINE PRESSURE UNDER120 PSI) — 06/06/17 — W-4

1. FILTER FABRIC TO BE INSTALLED BETWEEN BOTTOM OF PIPE AND STONE BEDDING. FABRIC TO EXTEND VERTICALLY A MINIMUM OF 6" FROM BOTTOM OF VAULT (FULL CIRCUMFERENCE).

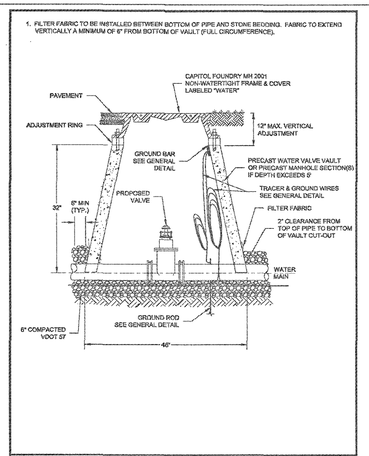

WESTERN VIRGINIA REGIONAL - CONSTRUCTION DETAIL

WATER LINE VALVE
& VAULT — 01/01/14 — W-9

1. FIRE HYDRANTS MAY BE USED AT LOW POINTS IN LIEU OF BLOW-OFFS.
2. THE PIPING AND "STREET ELB" BETWEEN CORPORATION STOP AND 2" GATE VALVE SHALL BE LEAD FREE BRASS OR DUCTILE IRON PIPE.
3. THE POINT OF CONNECTION TO THE WATER MAIN SHALL BE LOCATED NEAR THE BOTTOM OF THE MAIN (AS SHOWN) TO FACILITATE REMOVAL OF ACCUMULATED SEDIMENT.
4. SADDLES FOR PLASTIC PIPE SHALL BE PER RESIDENTIAL WATER SERVICE DETAIL.

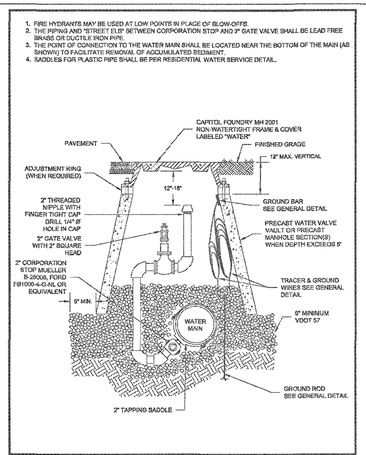

WESTERN VIRGINIA REGIONAL - CONSTRUCTION DETAIL

IN-LINE
BLOW-OFF ASSEMBLY — 02/10/15 — W-12

1. SEE RESIDENTIAL WATER SERVICE DETAIL FOR SADDLE REQUIREMENTS.
2. LARGER COMBINATION VALVE MAY BE REQUIRED DEPENDING ON APPLICATION.

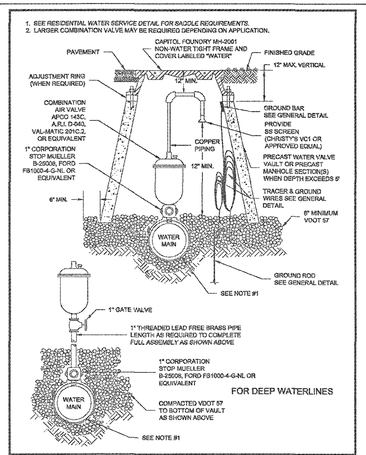

WESTERN VIRGINIA REGIONAL - CONSTRUCTION DETAIL

COMBINATION AIR VALVE ASSEMBLY — 02/10/15 — W-13

1. USE MODERATELY STIFF MIX OF NON SHRINK GROUT, SAND, AND 1/2" AND LESS DIAMETER GRAVEL WITH 28 DAYS, STRENGTH AT MINIMUM 3,000 P.S.I.
2. MIX IS TO BE FORCED INTO ALL GROOVES AND UNDER FLANGE OF FRAME AND LEFT AT OR ABOVE TOP OF FLANGE.
3. DO NOT BREAK ALL AROUND FRAME AND COVER, FOR 48 HOURS AFTER CONCRETE IS PLACED. THE USE OF HIGH EARLY STRENGTH CEMENT WOULD REDUCE TIME TO 24 HRS.
4. RESTRICT TRAFFIC LOAD FOR A MINIMUM OF 24 HOURS.

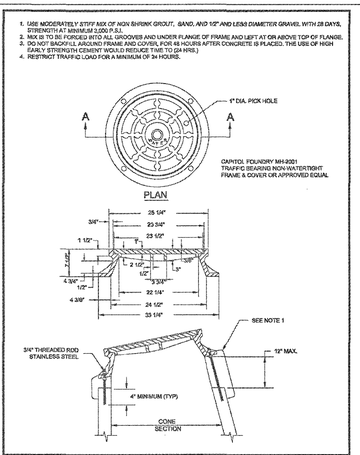

WESTERN VIRGINIA REGIONAL - CONSTRUCTION DETAIL

VAULT FRAME
AND COVER — 01/01/14 — W-16

1. PUBLIC HYDRANTS SHALL BE PAINTED SILVER WITH AN OIL-BASED PAINT. PRIVATE HYDRANTS SHALL ALSO BE PAINTED SILVER WITH AN OIL-BASED PAINT UNLESS OTHERWISE SPECIFIED BY THE JURISDICTIONAL FIRE MARSHALL.
2. FIRE HYDRANT SHALL BE INSTALLED 2' MIN. AND 4' MAX. FROM BACK OF CURB OR 8' MIN. AND 12' MAX. FROM EDGE OF PAVEMENT WHEN CURB IS NOT PRESENT. FIRE HYDRANT TO BE INSTALLED WITHIN RIGHT-OF-WAY OR EASEMENT LINE.
3. AREA AROUND HYDRANT AT A RADIUS OF 4' TO BE LEVEL AND UNOBSTRUCTED.
4. WATERPROOF BASE OR OUT OF SERVICE RINGS SHALL BE PLACED OVER ALL NEWLY INSTALLED FIRE HYDRANTS.
5. HYDRANT ASSEMBLIES SHALL BE RODDED AND RESTRAINED WITH APPROVED M.J. GLAND RESTRAINTS. HIGH PRESSURE (OVER 150 PSI) ALSO REQUIRES CONCRETE THRUST BLOCKS AS SHOWN BELOW.
6. IF DURING CONSTRUCTION THE SEASONAL WATER LEVEL IS NOTED TO BE ABOVE THE DRAIN OUTLETS OF THE PROPOSED HYDRANT, THE PARTICIPATING UTILITY WILL BE NOTIFIED IMMEDIATELY SO THAT THE HYDRANT CAN BE RELOCATED TO A SUITABLE LOCATION. OMITTED, OR THE DRAIN HOLE PLUGGED.
7. TWO WRAPS OF TRACER WIRE SHALL BE WRAPPED AROUND BASE OF HYDRANT.
8. APPROVED MODELS - AVK MODEL 2780, AFC MODEL 8-84-B-5, MUELLER CENTURION A423, KENNEDY K81D OR EQUIVALENT.
9. WHERE HYDRANT LATERAL(S) IS APPROVED BY THE PARTICIPATING UTILITY TO BE LONGER IN LENGTH, MAKING THE CONTINUOUS SECTION OF PIPE ON EACH SIDE OF THE GATE VALVE UNFEASIBLE, RESTRAINED PIPE JOINTS SHALL BE INSTALLED BETWEEN THE TEE AND GATE VALVE. IN LIEU OF RODDING, HOWEVER, A RODDED CONTINUOUS SECTION OF PIPE SHALL ALWAYS BE INSTALLED BETWEEN THE GATE VALVE AND HYDRANT.

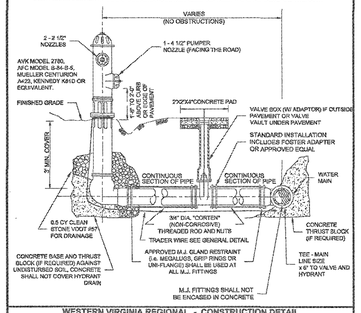

WESTERN VIRGINIA REGIONAL - CONSTRUCTION DETAIL

FIRE HYDRANT
ASSEMBLY — 02/10/15 — W-17

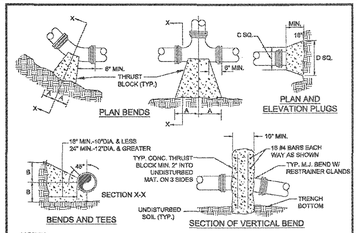

NOTES
1. FOR VERT. BEND DOWN IN EXCESS OF 11 1/4° BEND, ANCHORAGE SHALL BE DESIGNED BY ENGINEER.
2. FOR VERT. BEND UPWARD, BLOCKING TO BE SIMILAR TO THAT FOR HORZ. BEND.
3. GLANDS & BOLTS SHALL BE PROTECTED FROM CONC. WITH PLASTIC SHEETING WHEN POURING THRUST BLOCKS.
4. ALL THRUST BLOCK & SUPPORT CONCRETE SHALL BE 3000 PSI READY MIX CONCRETE.
5. THRUST BLOCKS WITH "B" DIMENSION GREATER THAN 30" SHALL HAVE THE RESTRAINED PIPE INSTALLED WITH A MINIMUM OF 4' OF COVER. REFER TO "MINIMUM THRUST RESTRAINT OF PIPE JOINTS DESIGN LENGTHS" DETAIL FOR WHEN THRUST BLOCKS ARE REQUIRED TO BE USED.
6. WHEN THRUST BLOCK IS REQUIRED BUT NOT FEASIBLE TO CONSTRUCT, THRUST COLLAR SHALL BE USED. SEE "THRUST COLLAR" DETAIL.
7. PRESSURE = 200psi
   BEARING = 2000psf
   FACTOR OF SAFETY = 1.5

PIPE SIZE	90° BEND		45° BEND		22.5° BEND		11.25° BEND		TEE		PLUG	
	A	B	A	B	A	B	A	B	A	B	C	D
4"	8"	12"	6"	8"	6"	6"	6"	6"	11"	9"	10"	6"
6"	18"	12"	9"	10"	8"	8"	8"	8"	11"	10"	12"	18"
8"	16"	13"	10"	10"	8"	8"	8"	8"	11"	12"	12"	24"
10"	20"	15"	12"	14"	8"	12"