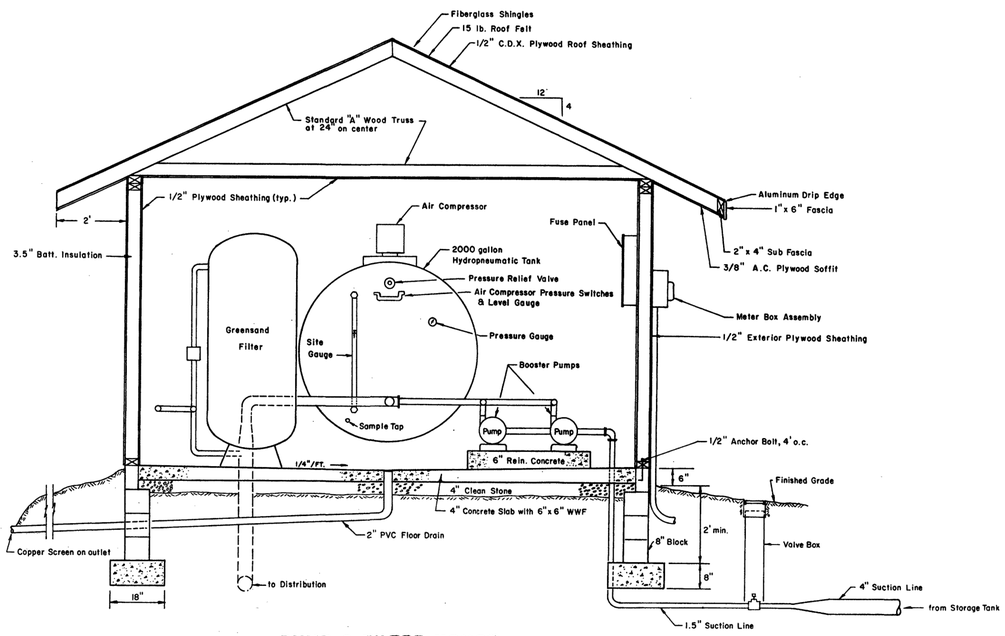

PUMP & FILTER HOUSE SECTION VIEW

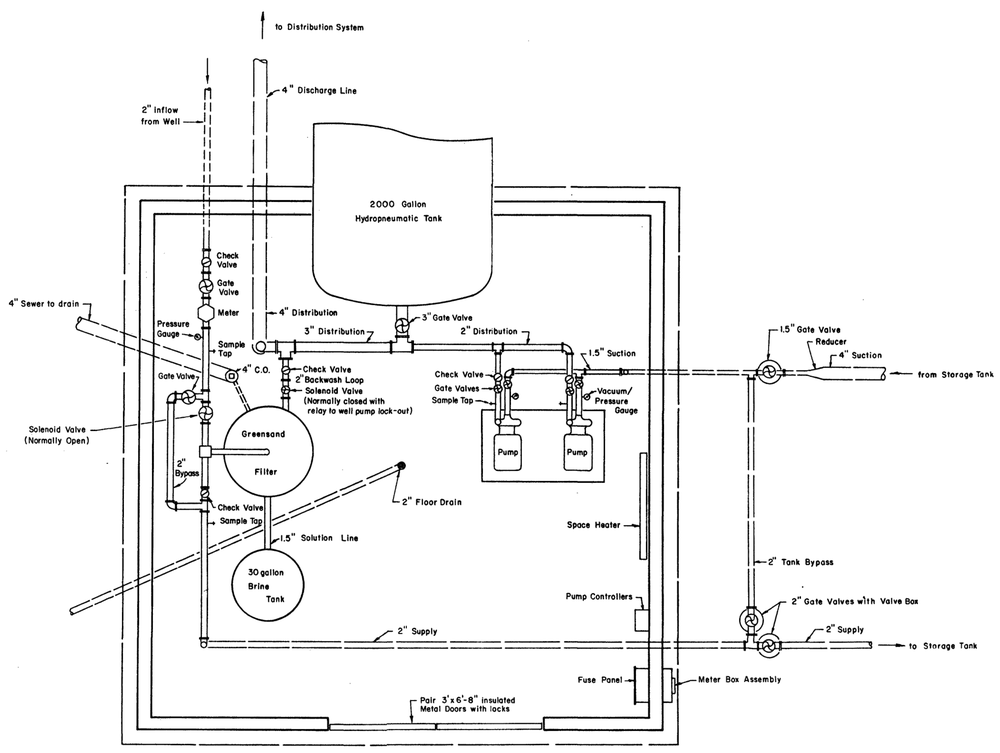

PUMP & FILTER HOUSE PLAN VIEW

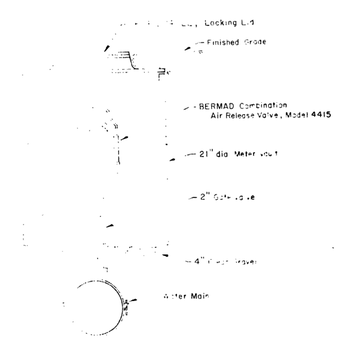

AIR RELEASE VALVE

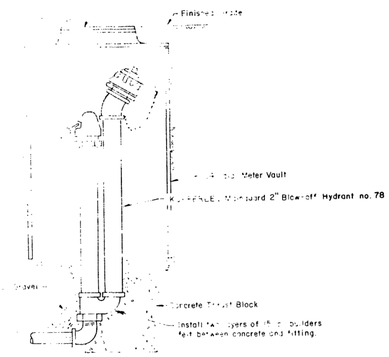

BLOWOFF HYDRANT

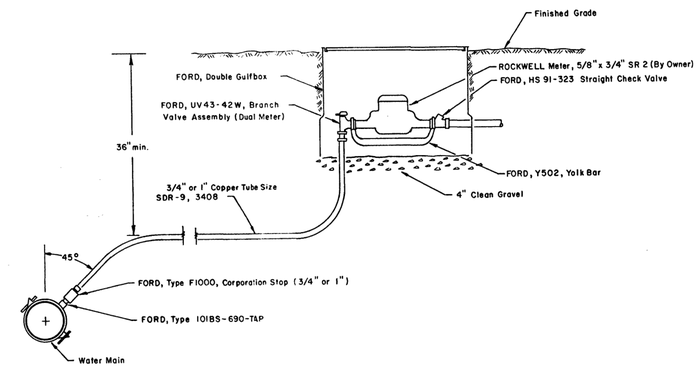

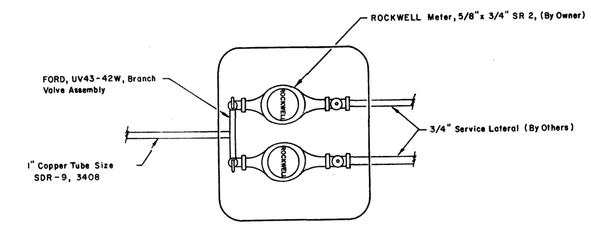

DUAL METER INSTALLATION

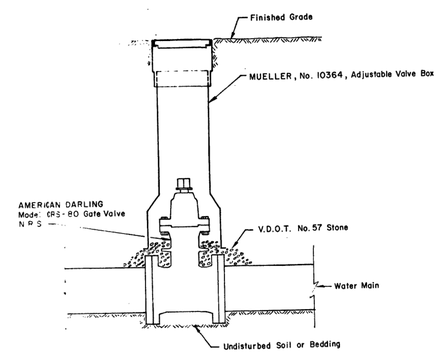

VALVE INSTALLATION

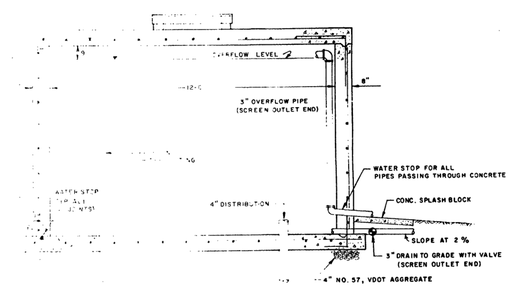

CONCRETE STORAGE TANK
SECTION B-B

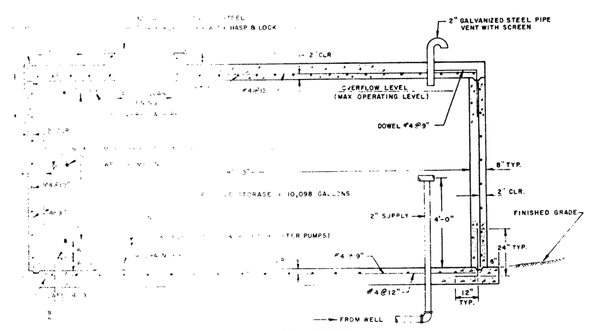

CONCRETE STORAGE TANK
SECTION A-A

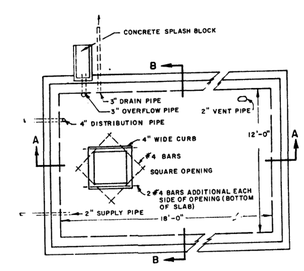

CONCRETE STORAGE TANK
PLAN VIEW

DATE	
6	
5	
4	
3	
2	
1	

REVISIONS

DATE: January 23, 1992 SCALE: N/A
JOB No.: 911112 CHKD.: RGL

—LANG—
engineering co.
Consulting Engineers · Land Planners
P.O. Box 565 Dublin, Va. 24083 (703) 992-5520

FOX CHASE SUBDIVISION
WATER SYSTEM DETAILS
FRANKLIN COUNTY VIRGINIA

SHEET NO. 9 OF 8