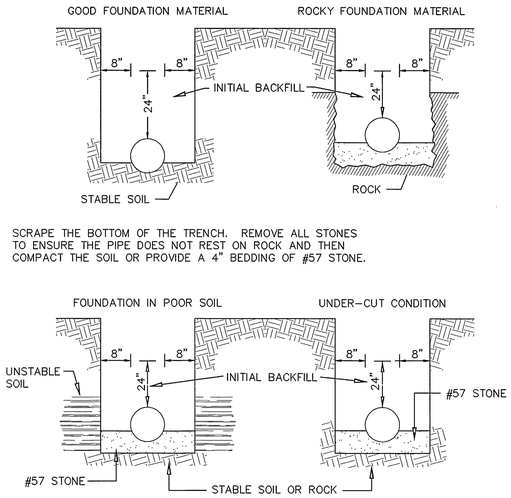

SCRAPE THE BOTTOM OF THE TRENCH. REMOVE ALL STONES TO ENSURE THE PIPE DOES NOT REST ON ROCK AND THEN COMPACT THE SOIL OR PROVIDE A 4" BEDDING OF #57 STONE.

NOTES:
1. NO ROCKS SHALL BE ALLOWED WITHIN 24" OF THE WATER LINES.
2. NO ROCKS LARGER THAN 6" IN ANY DIMENSION SHALL BE ALLOWED ABOVE THE INITIAL BACKFILL.
3. THE INITIAL BACKFILL SHALL BE PLACED AND COMPACTED IN 6" LIFTS.
4. NO ORGANIC OR FROZEN MATERIAL OR DEBRIS SHALL BE ALLOWED IN THE TRENCH.
5. BELL HOLES SHALL BE DUG OUT IN ALL CASES.

TRENCH INSTALLATION DUCTILE IRON PIPE

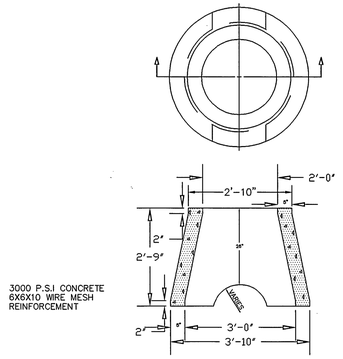

WATER VALVE VAULT PRECAST CONCRETE

MAIN LINE VALVE INSTALLATION

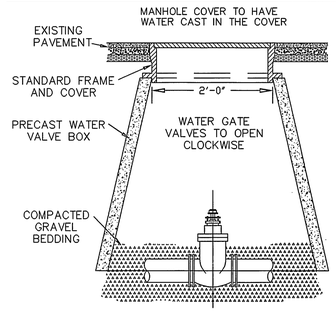

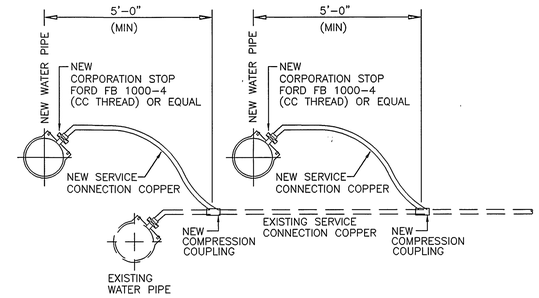

NEW WATER SERVICE CONNECTION AT EXISTING WATER METER

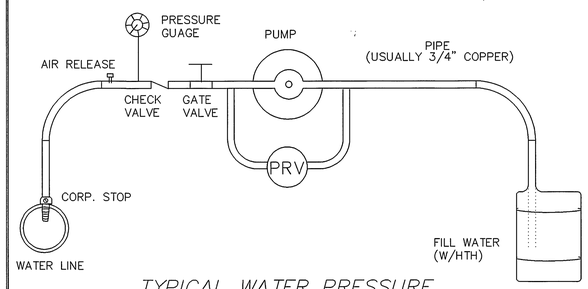

TYPICAL WATER PRESSURE TEST RIG

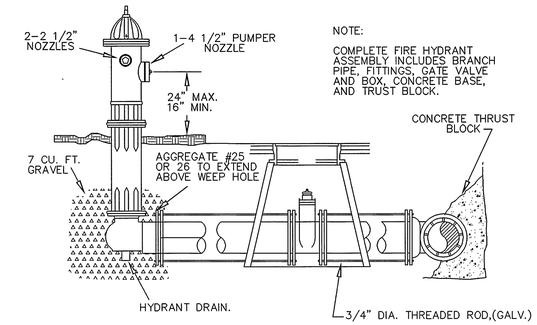

NOTE:
COMPLETE FIRE HYDRANT ASSEMBLY INCLUDES BRANCH PIPE, FITTINGS, GATE VALVE AND BOX, CONCRETE BASE, AND TRUST BLOCK.

FIRE HYDRANT ASSEMBLY

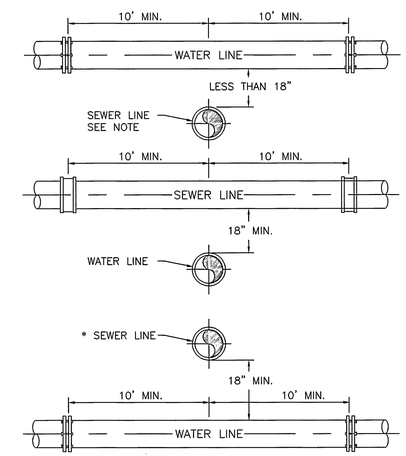

NOTE:
* SEWER LINE ABOVE WATERLINE TO BE CONSTRUCTED OF AWWA WATER LINE MATERIAL & PRESSURE TESTED (SEE SPEC.) AT NO ADDITIONAL COST.

WATER and SEWER CROSSING DETAIL

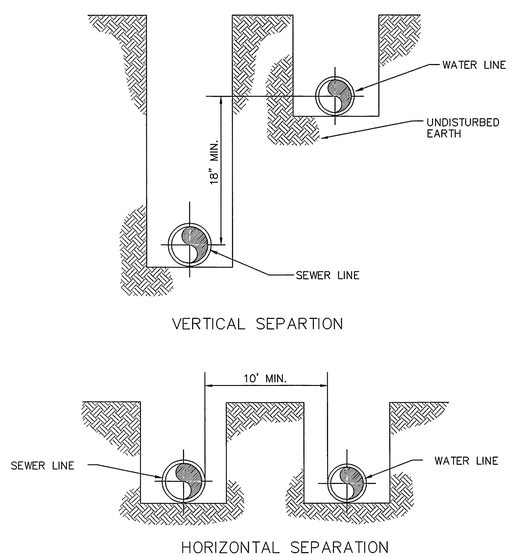

WATER and SEWER SEPARATION DETAIL

RECORD DRAWINGS 5/27/99

REACTION BLOCKING WATER FACILITIES

NOTE:
PAINT ALL EXPOSED STEEL WITH TWO COATS OF A WATERPROOF BITUMASTIC COMPOUND

ALL CONCRETE SHALL BE CLASS A-3

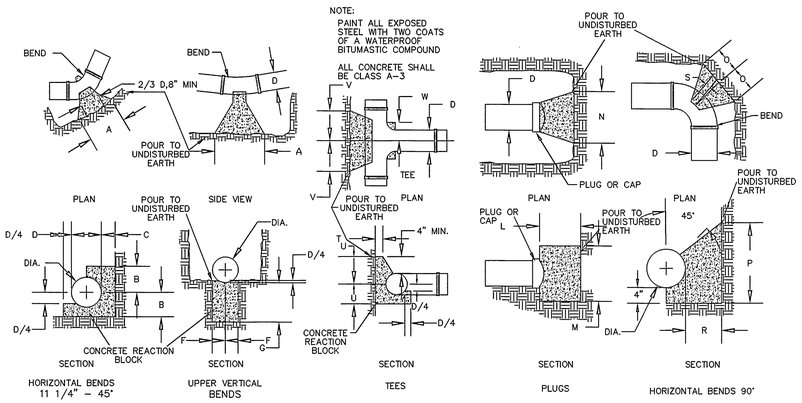

DIA.	HORIZONTAL BENDS 11 1/4°						22 1/2°			45°			UPPER VERTICAL BENDS 11 1/4°			22 1/2°			45°			PLUGS			HORIZ. BENDS 90°				TEE BRANCH			
	A	B	C	A	B	C	A	B	C	E	F	G	E	F	G	E	F	G	L	M	N	O	P	R	S	T	U	V	W
4"	.50	.58	.75	.75	.58	.75	1.25	.58	.75	.50	.58	.58	.75	.58	.58	1.25	.58	.58	.50	1.17	1.50	1.17	1.17	1.67	.42	.75	.67	.75	.50
6"	.50	.58	.75	.75	.58	.75	1.25	.58	.75	.50	.58	.58	.75	.58	.58	1.25	.58	.58	.50	1.17	1.50	1.17	1.17	1.67	.42	.75	.67	.75	.50
8"	.67	.67	.75	1.00	.67	.75	2.00	.67	.75	.67	.67	.58	1.00	.67	.67	2.08	.75	.83	.67	1.50	2.25	1.58	1.50	1.75	.50	.75	.83	1.00	.67
10"	.83	.75	.75	1.50	.75	.83	2.50	.75	.92	.83	.75	.67	1.50	.83	.67	2.08	.75	.83	.67	2.00	2.50	1.67	2.08	1.75	.50	.83	1.00	1.25	.67
12"	1.00	.83	.75	1.75	.92	.92	2.92	.92	1.17	1.00	.83	.67	1.75	.83	.67	2.50	.92	.92	.83	2.33	3.25	2.00	2.50	1.92	.58	1.00	1.25	1.42	.67
16"	1.33	1.00	.75	2.33	1.00	1.17	3.67	1.25	1.42	1.33	1.00	.75	2.25	.83	.75	3.33	1.25	1.25	1.00	2.92	4.17	2.08	3.00	2.17	.83	1.17	1.67	1.83	.83
20"	1.67	1.17	1.00	3.17	1.17	1.33	4.75	1.50	1.83	1.67	1.17	.83	3.00	1.17	1.00	4.17	1.50	1.50	1.33	3.75	5.17	3.50	3.83	2.83	1.00	1.33	2.08	2.25	1.17
24"	2.00	1.33	1.00	4.00	1.33	1.50	6.08	1.67	1.92	2.00	1.33	1.00	3.50	1.33	1.00	5.00	1.75	1.75	1.67	4.33	6.25	4.67	4.00	3.00	1.00	1.50	2.50	2.67	1.33
30"	2.50	1.50	1.08	5.00	1.58	1.75	7.95	2.00	3.08	2.50	1.58	1.08	4.17	1.58	1.08	6.25	2.25	2.25	2.00	5.42	7.42	5.57	5.00	3.83	1.17	1.75	3.08	3.92	1.83
36"	3.00	1.92	1.17	5.75	2.00	2.00	8.92	2.50	3.33	3.00	1.58	1.17	5.33	2.00	1.17	7.50	2.50	2.67	2.00	6.50	9.00	6.83	6.00	4.83	1.17	2.00	3.75	3.92	1.83

UTILITY BEDDING AND PROTECTION WATER FACILITIES

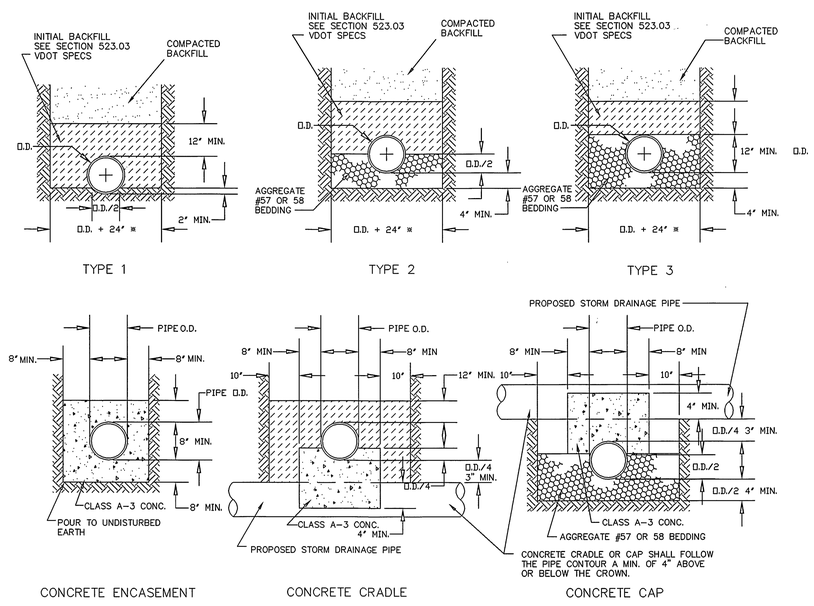

NOTES:
1. WHERE THE TRENCH BOTTOM IS IN ROCK, IT SHALL BE EXCAVATED TO A MINIMUM OF 8" BELOW THE BOTTOM OF THE PIPE AND BACKFILLED WITH BEDDING MATERIAL.
2. WHERE PIPE FOUNDATIONS ARE YIELDING, PIPE SHALL BE BEDDED ON A MINIMUM OF 8" BEDDING MATERIAL.

* FOR PIPE LESS THAN 12" THE TRENCH WIDTH MAY BE 36" MAXIMUM.

LMW P.C.
ENGINEERING · ARCHITECTURE · SURVEYING
102 ALBEMARLE AVE., S.E.
ROANOKE, VIRGINIA 24013
(540) 345-0675
FAX (540) 342-4456

FRANKLIN ROAD WATER MAIN REPLACEMENT PROJECT
CITY OF ROANOKE, VIRGINIA

NO.	DATE	DESCRIPTION	BY

STANDARD DETAILS

COMMONWEALTH OF VIRGINIA
DOUGLAS R. MEREDITH, JR.
No. 22942
PROFESSIONAL ENGINEER

Designed By	DME
Drawn By	DME/JDC
Checked By	RCW
Approved By	DRM
Submitted By	DRM
Drawing	1497SH15.DWG
Date	4/2/98
Scale	NONE
Commission No.	1497
Sheet	15 of 16

C:\DWGS\1497\1497SH15.DWG PLOT DATE: 4/2/98

6366