1. PUBLIC EASEMENT WIDTH SHALL BE DETERMINED BASED ON 1:1 SIDE SLOPE EXTENDING FROM THE FINISHED GRADE TO OUTSIDE EDGE OF PIPE (NOMINAL PIPE DIAMETER) ROUNDED UP TO THE NEAREST 1' INCREMENT, OR 20' MINIMUM, WHICHEVER IS GREATER.
2. THIS EASEMENT SHALL EXTEND ALONG THE ENTIRE LENGTH OF THE SUBJECT PIPE AT LEAST ONE HALF THE DISTANCE OF EASEMENT PAST CENTER OF LAST MANHOLE OR WATER APPURTENANCE.

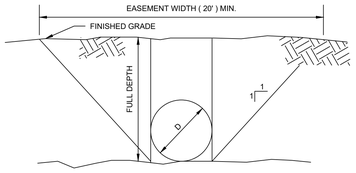

D = PIPE DIAMETER

WESTERN VIRGINIA REGIONAL – CONSTRUCTION DETAIL

SANITARY SEWER AND WATER LINE EASEMENTS — 01/01/14 — **G-3**

---

1. A 1" DRAIN WILL BE REQUIRED ON THE LOWER END OF THE CASING PIPE.
2. SPACERS SHALL BE RACI HDPE SPACERS OR EQUIVALENT. STAINLESS STEEL SPACERS MAY BE USED IF IN COMPLIANCE WITH THE FOLLOWING CRITERIA:
   - INTERIOR SURFACES OF THE CIRCULAR STAINLESS STEEL BAND SHALL BE LINED WITH EPDM OR NEOPRENE MATERIAL.
   - ABRASION RESISTANT RUNNERS/SKIDS SHALL BE POLYMER MATERIAL WITH EACH END BEVELED TO FACILITATE EASE OF INSTALLATION INTO CASING PIPE.
3. SPACERS SHALL BE SPACED 6 1/2' ON SEWER PIPE.
4. CARRIER PIPE SHALL BE DUCTILE OR HDPE IN ACCORDANCE WITH REGIONAL STANDARDS.
5. IF HDPE CARRIER PIPE IS USED AND PRECISE GRADES ARE NOT REQUIRED THROUGH CASING, SPACERS MAY BE OMITTED.
6. CASING PIPE TO BE STEEL IN ACCORDANCE WITH VDOT STANDARD DETAIL EP-1 OR HDPE AS SPECIFIED IN THE STANDARDS IF APPROVED BY THE PARTICIPATING UTILITY.
7. CONCRETE CASING PIPE WILL NOT BE ALLOWED.
8. DIAMETER OF CASING PIPE SHALL BE AS SHOWN IN THE TABLE BELOW UNLESS OTHERWISE SPECIFIED BY THE PARTICIPATING UTILITY. WHERE SPACERS ARE NOT REQUIRED, CASING PIPE SHALL BE MINIMUM DIAMETER TO ADEQUATELY INSTALL AND PASS CARRIER PIPE THROUGH AND TO MINIMIZE VOID SPACE BETWEEN CARRIER AND CASING PIPES.

CASING PIPE SIZE CHART

CARRIER PIPE (NOMINAL DIAMETER)	CASING PIPE (DIAMETER)
6"	12"
8"	16"
10"	24"
12"	24"
14"	24"
16"	30"
18"	30"
24"	42"
30"	42"

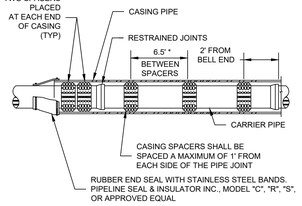

* ADDITIONAL SPACING ALLOWED AS RECOMMENDED BY PIPE MANUFACTURER.

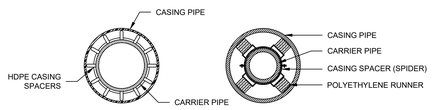

WESTERN VIRGINIA REGIONAL – CONSTRUCTION DETAIL

PIPE SUPPORT IN CASING PIPE — 05/05/15 — **G-6**

---

1. PIER REQUIRED WHEN STORM DRAIN OR OTHER PIPES CROSSES OVER THE OTHER UTILITY WITH A VERTICAL CLEARANCE OF LESS THAN 18".
2. PIER TO BE BUILT ON UNDISTURBED EARTH.
3. CONCRETE TO BE READY MIX, CLASS A3.

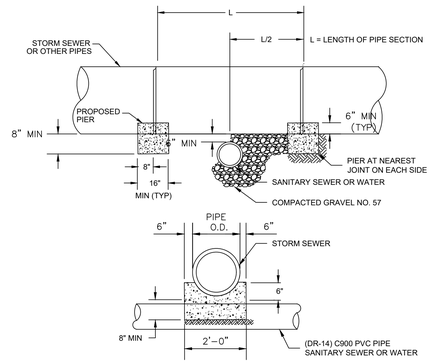

WESTERN VIRGINIA REGIONAL – CONSTRUCTION DETAIL

CONCRETE PIER — 01/01/14 — **G-8**

---

1. BEDDING, HAUNCHING AND INITIAL BACKFILL CONSTRUCTION SHALL BE IN ACCORDANCE WITH THIS DETAIL AND MANUFACTURER'S RECOMMENDATION.
2. ALL PVC PIPE SHALL BE BEDDED IN COMPACTED VDOT #57 OR #68 STONE, OR CRUSHER RUN.
3. IN AREAS SUBJECTED TO VEHICULAR TRAFFIC, BEDDING STONE AND FILL SHALL BE PLACED IN 6" LIFTS FROM BOTTOM OF TRENCH TO 1' ABOVE THE PIPE AND THE REMAINING SHALL BE PLACED IN 10" LIFTS AND SHALL BE COMPACTED TO AT LEAST 90% OF MAXIMUM DENSITY AS DETERMINED BY ASTM D 698.
4. BEDDING REQUIREMENTS FOR DUCTILE IRON WATER LINE ARE DEPENDENT ON MANUFACTURER'S BEDDING CRITERIA.
5. ALL EXCAVATIONS SHALL COMPLY WITH OSHA TECHNICAL MANUAL, CHAPTER 2, TITLED "EXCAVATIONS: HAZARD RECOGNITION IN TRENCHING AND SHORING."
6. THE TRACER WIRE SHALL BE PLACED ALONG THE LOWER QUADRANT OF THE PIPE. THE WIRE SHALL NOT TOUCH THE PIPE, BUT SHALL BE A MAXIMUM OF 6" FROM THE PIPE. NON-METALLIC SPACERS MAY BE USED TO MAINTAIN A SET DISTANCE FROM THE UTILITY.

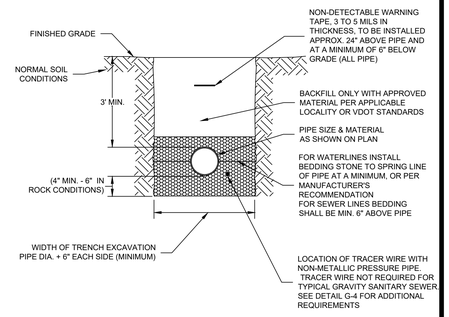

WESTERN VIRGINIA REGIONAL – CONSTRUCTION DETAIL

BEDDING AND BACKFILL OUTSIDE OF PAVED AREAS — 08/01/15 — **G-11**

---

1. BEDDING, HAUNCHING AND INITIAL BACKFILL CONSTRUCTION SHALL BE IN ACCORDANCE WITH THIS DETAIL AND MANUFACTURER'S RECOMMENDATION.
2. ALL PVC PIPE SHALL BE BEDDED IN COMPACTED VDOT #57 OR #68 STONE.
3. IN VDOT ROW, THE CONTRACTOR SHALL REPLACE THE PAVEMENT AS REQUIRED AND SPECIFIED BY VDOT. IN ROANOKE CITY, CONTRACTOR SHALL REPLACE PAVEMENT AS REQUIRED BY CITY OF ROANOKE RIGHT OF WAY EXCAVATION AND RESTORATION STANDARDS, LATEST EDITION.
4. ALL CONSTRUCTION WITHIN THE PUBLIC RIGHT-OF-WAY SHALL BE AS SPECIFIED BY VDOT OR APPLICABLE LOCALITY.
5. PRIOR TO CONSTRUCTION, CONTRACTOR IS RESPONSIBLE FOR SECURING ALL REQUIRED PERMITS FROM VDOT AND/OR APPLICABLE LOCALITY.
6. IN AREAS SUBJECTED TO VEHICULAR TRAFFIC, BEDDING STONE AND FILL SHALL BE PLACED IN 6" LIFTS AND SHALL BE COMPACTED TO AT LEAST 95% OF MAXIMUM DENSITY AS DETERMINED BY ASTM D 698.
7. ALL SEWER LINE PIPE SHALL BE BEDDED IN COMPACTED GRANULAR MATERIAL. BEDDING REQUIREMENTS FOR DUCTILE SEWER LINE ARE DEPENDENT ON MANUFACTURER'S BEDDING CRITERIA.
8. BENCH CUT ON EACH SIDE OF PAVEMENT SHALL BE IN ACCORDANCE WITH VDOT OR APPLICABLE LOCALITY'S SPECIFICATIONS.
9. ALL EXCAVATIONS SHALL COMPLY WITH OSHA TECHNICAL MANUAL, CHAPTER 2, TITLED "EXCAVATIONS: HAZARD RECOGNITION IN TRENCHING AND SHORING."
10. THE TRACER WIRE SHALL BE PLACED ALONG THE LOWER QUADRANT OF THE PIPE. THE WIRE SHALL NOT TOUCH THE PIPE, BUT SHALL BE A MAXIMUM OF 6" FROM THE PIPE. NON-METALLIC SPACERS MAY BE USED TO MAINTAIN A SET DISTANCE FROM THE UTILITY.

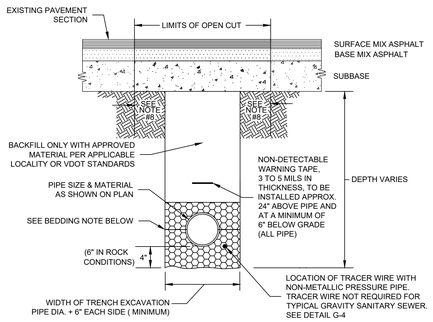

BEDDING: FOR WATERLINES, INSTALL BEDDING STONE TO SPRING LINE OF PIPE AT A MINIMUM, OR PER MANUFACTURER'S RECOMMENDATION. FOR SEWER LINES, BEDDING SHALL BE MINIMUM 6" ABOVE PIPE.

WESTERN VIRGINIA REGIONAL – CONSTRUCTION DETAIL

BEDDING AND BACKFILL UNDER PAVEMENT AND IN RIGHT-OF-WAY — 08/01/15 — **G-12**

---

1. ALL PAVEMENT MARKINGS DAMAGED OR DESTROYED BY TRENCH EXCAVATION ACTIVITY SHALL BE REPLACED BY THE PERMITEE PER VDOT SPECIFICATIONS.
2. ALL PVC PIPE SHALL BE BEDDED IN COMPACTED VDOT #57 OR #58 STONE.
3. THIS DETAIL FOR HIGHWAYS WITH EXISTING ASPHALT CONCRETE PAVEMENT SECTIONS.
4. THE EXTENT OF PAVEMENT RESTORATION FOR ALL OTHER PAVEMENT CUTS SHALL BE DETERMINED BY THE DISTRICT ADMINISTRATOR'S DESIGNEE.
5. ** WIDTH OF TRAVEL LANE MINIMUM FULL PAVEMENT WIDTH FOR OPEN CUT TRENCHING ALONG ROAD CENTERLINE OR 25' (MINIMUM) FOR PERPENDICULAR CROSSINGS.
6. THE TRACER WIRE SHALL BE PLACED ALONG THE LOWER QUADRANT OF THE PIPE. THE WIRE SHALL NOT TOUCH THE PIPE, BUT SHALL BE A MAXIMUM OF 6" FROM THE PIPE. NON-METALLIC SPACERS MAY BE USED TO MAINTAIN A SET DISTANCE FROM THE UTILITY.

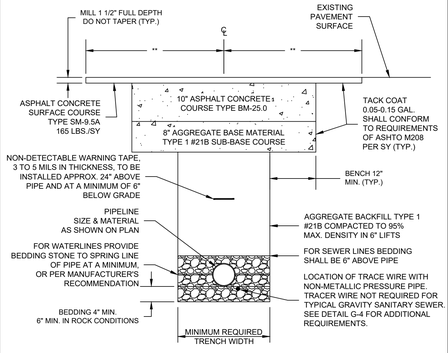

WESTERN VIRGINIA REGIONAL – CONSTRUCTION DETAIL

VDOT LAND USE PERMIT OPEN CUT PAVEMENT RESTORATION — 01/01/14 — **G-13**

---

1. BEDDING, HAUNCHING AND INITIAL BACKFILL CONSTRUCTION SHALL BE IN ACCORDANCE WITH THIS DETAIL AND MANUFACTURER'S RECOMMENDATION
2. ALL PVC PIPE SHALL BE BEDDED IN COMPACTED VDOT #57 OR #58 STONE.
3. IN VDOT ROW, THE CONTRACTOR SHALL REPLACE THE OPEN CUT WITH A MINIMUM TOP COURSE OF 1.5" (MINIMUM) VDOT SM-9.5A, BASE COURSE OF 3" VDOT BM-25.0, AND SUBBASE OF 10" VDOT 21B, OR AS REQUIRED BY VDOT. IN ROANOKE CITY, CONTRACTOR SHALL REPLACE PAVEMENT AS REQUIRED BY CITY OF ROANOKE RIGHT OF WAY EXCAVATION AND RESTORATION STANDARDS.
4. ALL CONSTRUCTION WITHIN THE PUBLIC RIGHT-OF-WAY SHALL BE AS SPECIFIED BY VDOT OR APPLICABLE LOCALITY.
5. PRIOR TO CONSTRUCTION, CONTRACTOR IS RESPONSIBLE FOR SECURING ALL REQUIRED PERMITS FROM VDOT AND/OR APPLICABLE LOCALITY.
6. IN AREAS SUBJECTED TO VEHICULAR TRAFFIC, BEDDING STONE AND FILL SHALL BE PLACED IN 6" LIFTS AND SHALL BE COMPACTED TO AT LEAST 95% OF MAXIMUM DENSITY AS DETERMINED BY ASTM D 698.
7. ALL SEWER LINE PIPE SHALL BE BEDDED IN COMPACTED GRANULAR MATERIAL. BEDDING REQUIREMENTS FOR DUCTILE SEWER LINE ARE DEPENDENT ON MANUFACTURER'S BEDDING CRITERIA.
8. BENCHCUT ON EACH SIDE OF PAVEMENT: CITY OF ROANOKE EQUALS 12"; VDOT RIGHT-OF-WAY EQUALS 6". ALL EXCAVATIONS SHALL COMPLY WITH OSHA TECHNICAL MANUAL, CHAPTER 2, TITLED "EXCAVATIONS: HAZARD RECOGNITION IN TRENCHING AND SHORING."
9. THE TRACER WIRE SHALL BE PLACED ALONG THE LOWER QUADRANT OF THE PIPE. THE WIRE SHALL NOT TOUCH THE PIPE, BUT SHALL BE A MAXIMUM OF 6" FROM THE PIPE. NON-METALLIC SPACERS MAY BE USED TO MAINTAIN A SET DISTANCE FROM THE UTILITY.

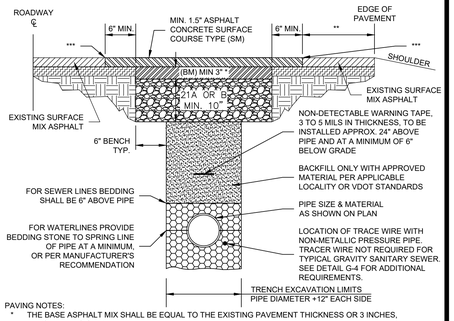

PAVING NOTES:
* THE BASE ASPHALT MIX SHALL BE EQUAL TO THE EXISTING PAVEMENT THICKNESS OR 3 INCHES, WHICHEVER IS GREATER.
** IF THE REMAINING DISTANCE TO THE EXISTING EDGE OF PAVEMENT IS LESS THAN 2 FEET, THE REMOVAL AND REPLACEMENT OF NEW SURFACE MIX ASPHALT SHALL EXTEND TO THE ORIGINAL EDGE OF PAVEMENT.
*** EXISTING PAVEMENT SURFACE MIX TO BE SAWCUT AND TACK COATED FOR A CLEAN CONTINUOUS JOINT.

WESTERN VIRGINIA REGIONAL – CONSTRUCTION DETAIL

PAVEMENT RESTORATION FOR LONGITUDINAL TRENCHING PARALLEL TO THE VDOT ROADWAY CENTERLINE — 01/01/14 — **G-14**

2016 ROAD & BRIDGE STANDARDS

PF-2

NOTES:

1. THIS STANDARD SHALL ONLY BE USED TO SUPPORT VEHICULAR AND PEDESTRIAN SIGNAL HEADS, PUSH BUTTONS, AND/OR SIGNS 36" IN WIDTH OR LESS, INCLUDING DIAMOND WARNING SIGNS WITH 36" OR LESS EDGE LENGTH.
2. EACH FOUNDATION SHALL BE PERMANENTLY MARKED TO INDICATE ALL SIDES FROM WHICH CONDUITS PASS. THIS MARK SHALL BE MADE WITH A TROWEL WHEN FINISHING THE CONCRETE AND SHALL BE ¼" DEEP AND 4" TO 6" LONG.
3. PEDESTAL POLE SHALL HAVE A BREAKAWAY TRANSFORMER TYPE BASE. THE TRANSFORMER BASE SHALL BE INSTALLED PER THE MANUFACTURER'S INSTALLATION INSTRUCTIONS.
4. SEE PEDESTRIAN ACTUATION STANDARDS FOR DETAILS.
5. PEDESTAL POLE LENGTH SHALL BE AS SPECIFIED IN THE CONTRACT DOCUMENTS. PEDESTAL POLE LENGTH SHALL NOT EXCEED 15 FEET.
6. MOUNTING HEIGHT SHALL BE AS SPECIFIED IN THE CONTRACT DOCUMENTS.
7. STRUCTURAL TUBE MATERIAL SHALL BE ALUMINUM 6061-T6 WITH MINIMUM 0.337" WALL THICKNESS.

(SIGNAL IS ON RECALL, NO PUSH BUTTON ACTUATION IS REQUIRED.)

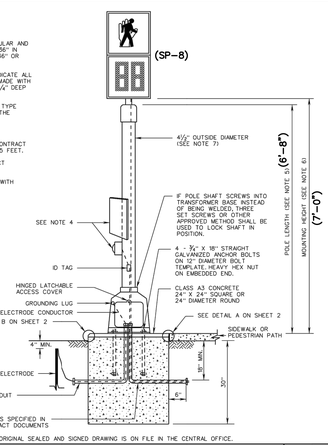

A COPY OF THE ORIGINAL SEALED AND SIGNED DRAWING IS ON FILE IN THE CENTRAL OFFICE.

VDOT ROAD AND BRIDGE STANDARDS	PEDESTAL POLE AND FOUNDATION DETAILS — VIRGINIA DEPARTMENT OF TRANSPORTATION	SPECIFICATION REFERENCE
SHEET 1 OF 2 — 1302.30 — REVISION DATE 07/16		700

2016 ROAD & BRIDGE STANDARDS

2016 ROAD & BRIDGE STANDARDS

SP-5,6,7,8,9

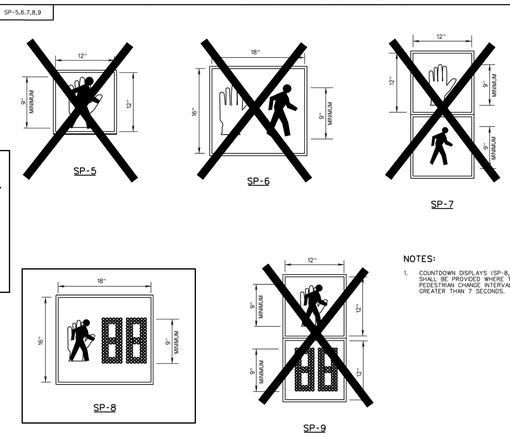

NOTES:

1. COUNTDOWN DISPLAYS (SP-8, SP-9) SHALL BE PROVIDED WHERE THE PEDESTRIAN CHANGE INTERVAL IS GREATER THAN 7 SECONDS.

A COPY OF THE ORIGINAL SEALED AND SIGNED DRAWING IS ON FILE IN THE CENTRAL OFFICE.

VDOT ROAD AND BRIDGE STANDARDS	PEDESTRIAN SIGNAL INDICATION DETAILS — VIRGINIA DEPARTMENT OF TRANSPORTATION	SPECIFICATION REFERENCE
SHEET 1 OF 1 — 1308.10 — REVISION DATE 02/16		703 238

2016 ROAD & BRIDGE STANDARDS

SP-8 ADDITIONAL AND PROJECT SPECIFIC NOTES:

1. CONTRACTOR SHALL PROVIDE AND INSTALL APS BEACON. APS BEACON SHALL BE MOUNTED TO THE PEDESTRIAN SIGNAL CASING (PED HEAD). TOTAL OF EIGHT (8) APS BEACONS REQUIRED.
   1.1. CONTRACTOR SHALL COORDINATE WITH CITY OF TRANSPORTATION.
2. PEDESTRIAN HEAD SHALL BE MOUNTED TO EXISTING SIGNAL POLE WITH LAMPE 1415 CLAM SHELL ASSEMBLY.
3. PEDESTRIAN HEAD SHALL BE PAINTED BLACK 16" X 9" WITH VANTAGE VISOR. (McCain BRAND PREFERRED)

SPECTRUM DESIGN
architects | engineers

Plaza Suite 1
10 Church Avenue, SE
Roanoke, VA 24011
540.342.6001

SPECTRUMPC.COM

City of Roanoke
Planning, Building, & Development
COMPREHENSIVE DEVELOPMENT PLAN
APPROVED
by Aaron Cypher 09/08/2021

NEW CONSTRUCTION FOR

GRTC TRANSIT STATION

CITY OF ROANOKE

Spectrum Design Project No.: **19106**

COMMONWEALTH OF VIRGINIA
MICHAEL A. RAKES
Lic. No. 28199
July 30, 2021
PROFESSIONAL ENGINEER

PROJ. MGR.:	CHECKED BY:	DRAWN BY:
JM	MAR	CDL

SHEET ISSUE DATE: **07.30.2021**

PROJECT PHASE: **CONSTRUCTION DOCUMENTS**

REVISION	NUMBER	DATE

KEY PLAN:

SHEET NAME:

CONSTRUCTION DETAILS

SHEET NUMBER:

C505

J:\19106\2.1 Civil\dwg\19106 Construction Details.dwg, Plotted By: cleste, Plotted: Aug 26, 2021 - 10:59am