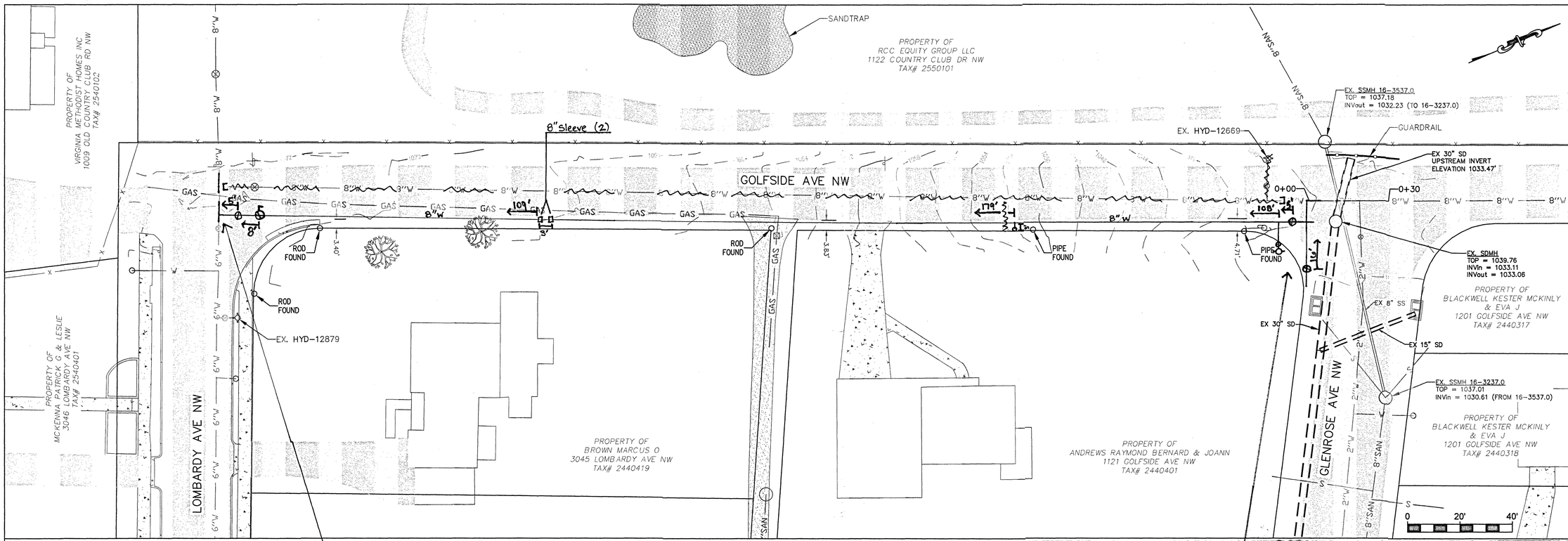

GENERAL NOTES:
1. SEWER LATERALS SHOWN ARE BASED ON CCTV FOOTAGE. ADDITIONAL LATERALS & CONFLICTS SHALL BE INVESTIGATED BY WVWA CONSTRUCTION TEAM PRIOR TO EXCAVATION.
2. PROPERTY LINES SHOWN FOR 3045 LOMBARDY AVE NW AND 1121 GOLFSIDE AVE NW ON THIS PAGE WERE SET BASED ON RECORDS AND FIELD SURVEY DATA.
3. ALL OTHER PROPERTIES ON THIS PAGE ARE BASED ON GIS DATA AND HAVE NOT BEEN FIELD SURVEYED.

Install Contractor		
Construction Start Date		
Completion Date		
Water Main(s)		
Manufacturer		
Diameter		
Pipe Class		
Material		
Comments		
Water Service(s)		
Manufacturer		
Diameter		
Pipe Class		
Material		
Comments		
Water Valve(s) 1		**Water Valve(s) 2**
Manufacturer		
Valve Type		
Diameter		
Direction to Open / Turns to Close		
Comments		
Water Valve (s) 3		**Water Valve (s) 4**
Manufacturer		
Valve Type		
Diameter		
Direction to Close / Turns to Close		
Comments		
Hydrant(s)		
Authority ID #		
Manufacturer		
Model		
Cast Date		
Static Pressure		
Comments		

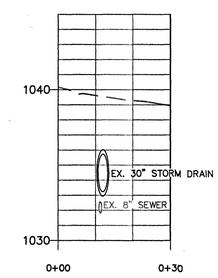

STORM & SEWER CROSSING PROFILE

SCALE
VERTICAL: 1" = 5'
HORIZONTAL: 1" = 20'

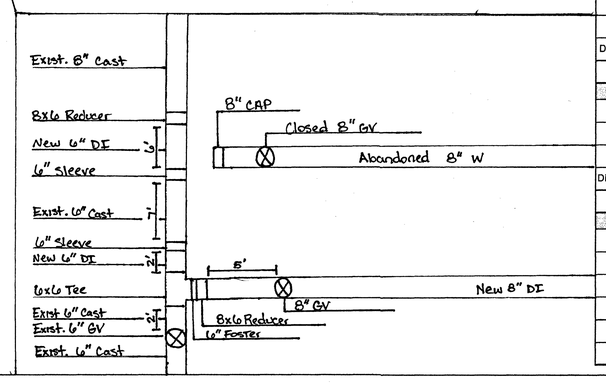

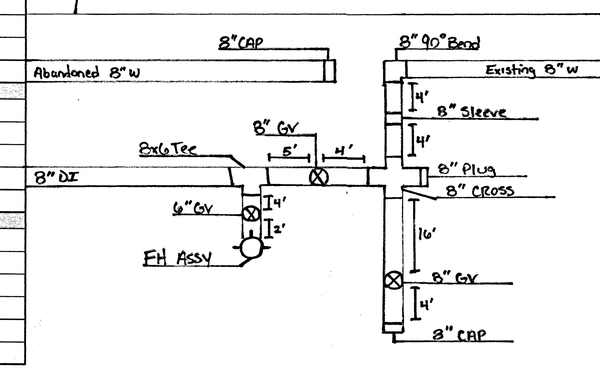

WESTERN VIRGINIA
WATER AUTHORITY
ENGINEERING SERVICES
601 S JEFFERSON ST, SUITE 300
ROANOKE, VA 24011
540-853-5700

GOLFSIDE AVE WATERLINE REPLACEMENT

BASEMAP

Rev	Description	Date	By
RC	Red line	8/22/24	RC

Designed: WVWA
Drawn: NSS
Checked: AJC
Approved:
Date: MAY 2024
Project: WCIP-454

1
Sheet 1 of 1