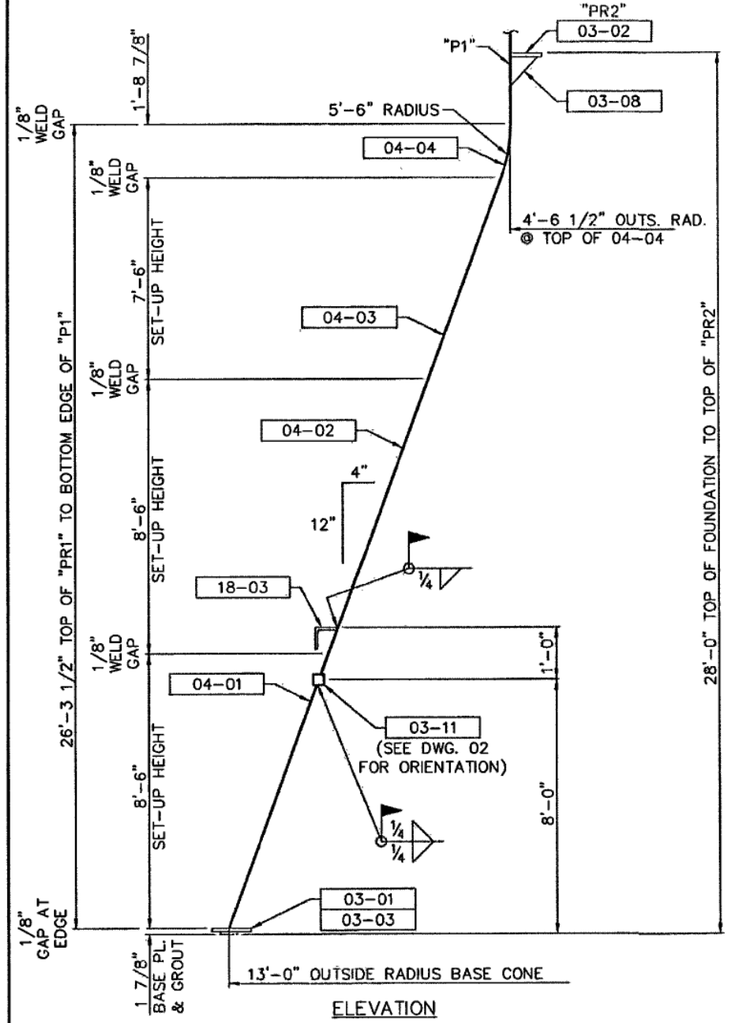

ELEVATION

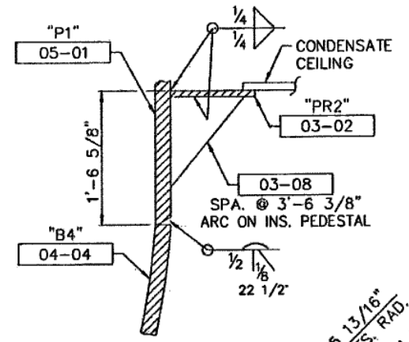

CONE TO PEDESTAL WELD DETAILS

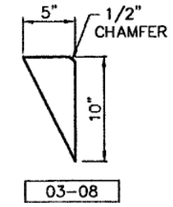

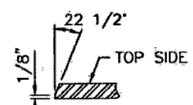

SECTION "A-A"

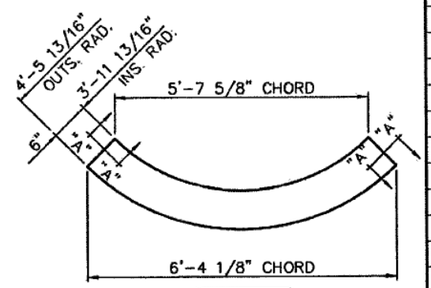

03-02
MAKE 4 (70 # EACH)
(SHIP w/05-PA-01)

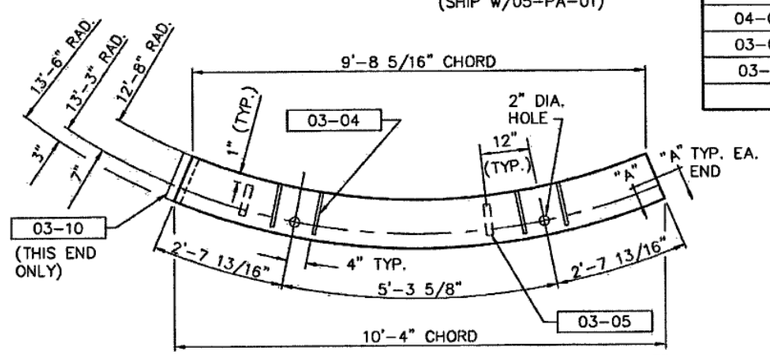

NOTE: ARC DIMENSIONS SHOWN ARE OUTSIDE EDGE OF PLATE

03-01
MAKE 7 (310# EACH)

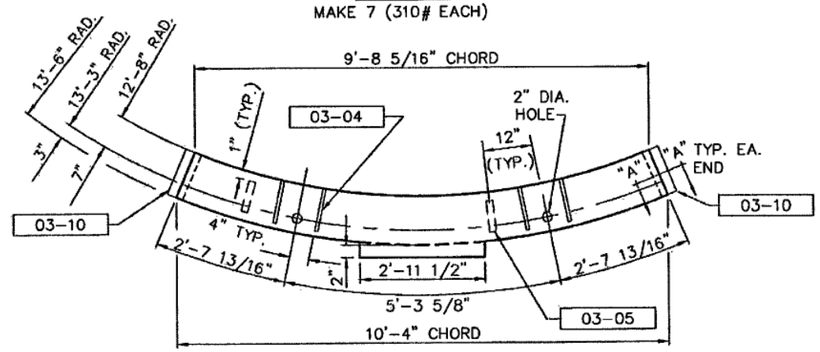

NOTE: ARC DIMENSIONS SHOWN ARE OUTSIDE EDGE OF PLATE

03-03
MAKE 1 (325# EACH) (LOCATE AT DOORWAY)

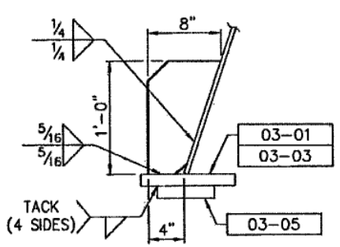

ANCHOR BOLT GUSSET

03-04

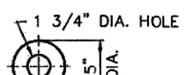

REINF. PLATES

03-06

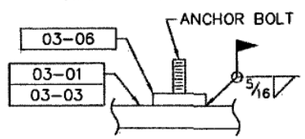

REINF. PLATE WELD DETAIL

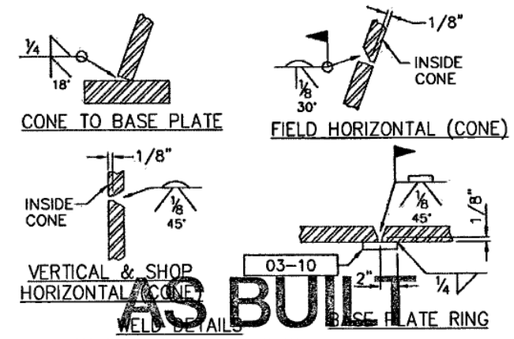

WELD DETAILS

ALL WELDS SHOWN ARE TYPICAL FOR BOTH SHOP AND FIELD

AS BUILT

SHIPPING ITEM	QTY.	PC. MK.	QTY.	MATERIAL REQ'D.	DESCRIPTION	UNIT WT.
03-BC-01	7			CONE "B1"/"B2"/"B3" ASSEMBLY		3,795
		04-01	1	PL C/F (4) 7/16" x 116" x 235"	CONE "B1"	
		04-02	1	PL C/F (2) 7/16" x 114" x 350"	CONE "B2"	
		04-03	1	PL C/F (2) 9/16" x 101" x 248"	CONE "B3"	
		03-01	1	PL C/F (1) 7/8" x 120" x 240"	PL RING "PR1"	
		03-10	1	FB 1/4" x 4" x 10"	BACK-UP BAR	
		03-04	4	PL 1/2" THK.	BOLT GUSSET	
		03-05	2	SB 1" SQ. x 8" LG.	SHIM BAR	
03-BD-01	1			CONE "B1"/"B2"/"B3" ASS'Y W/DOOR		5,435
		04-01	1	PL USE DROP FROM 04-01	CONE "B1"	
		04-02	1	PL USE DROP FROM 04-02	CONE "B2"	
		04-03	1	PL USE DROP FROM 04-03	CONE "B3"	
		03-03	1	PL USE DROP FROM 03-01	PL RING "PR1"	
		03-10	2	FB 1/4" x 4" x 10"	BACK-UP BAR	
		03-04	4	PL 1/2" THK.	BOLT GUSSET	
		03-05	2	SB 1" SQ. x 8" LG.	SHIM BAR	
		14-DF-01	1	BASE DOOR		
		16-NA-01	1	NAMEPLATE ASSEMBLY		
03-06	16			PL 1/2" THK.	REINF. PLATE	
03-07	15			BY NON-SHRINK	GROUT	50
03-02	4	(w/05-PA-01)		PL C/F (1) 1/2" x 60" x 120"	PL RING "PR2"	70
04-04	10	(w/05-PA-01)		PL C/F (1) 5/8" x 84" x 147"	CONE "B4"	125
03-08	8	(w/05-PA-01)		PL 1/2" THK.	GUSSETS	
03-11	1			BY 1" DIA. 3000# COUPLING w/PLUG	COUPLING	

COMMONWEALTH OF VIRGINIA
GERALD A. BURKE
Lic. No. 034963
7-17-15
PROFESSIONAL ENGINEER

REV.	BY:	DATE	REMARKS

CALDWELL Since 1887
Water · Energy · Industrial

ROANOKE, VIRGINIA
250,000 GALLON PEDESPHERE

BY: AMK
TITLE: BASE CONE ASSEMBLY
DATE: 07/07/15
DRAWING NO.: E-8344 03