SHIPPING ITEM	QTY.	PC. MK.	QTY.	MATERIAL REQ'D	DESCRIPTION	UNIT WT.
14-DF-01	1	(w/03-BD-01)		BASE DOOR		1,620
		14-01	1	PL 1/4" THK.	DOOR	
		14-02	2	PL 1" THK.	SIDE PLATE	
		14-03	3	PL 3/8" THK.	HINGE LUG	
		14-04	3	PL 3/8" THK.	HINGE BAR	
		14-05	2	FB 1/4" x 1 1/2" x 1 1/2" w/HOLE	LATCH LUG	
		14-06	1	PI (1/2) 36" OD x 1" x 3'-2 5/8"	DOOR ARCH	
		14-07	3	BY 3/4" DIA. x 2" LG.	HINGE BOLT	
		14-08	1	FB 1/4" x 2" x 15'-10 13/16"	DOOR FLANGE	
		14-09	1	FB 1/2" x 1 1/2" x 12" (STD PART)	HANDLE	
		14-16	2	FB 1/4" x 2" x 5'-5" LG.	VERT. STIFFNER	

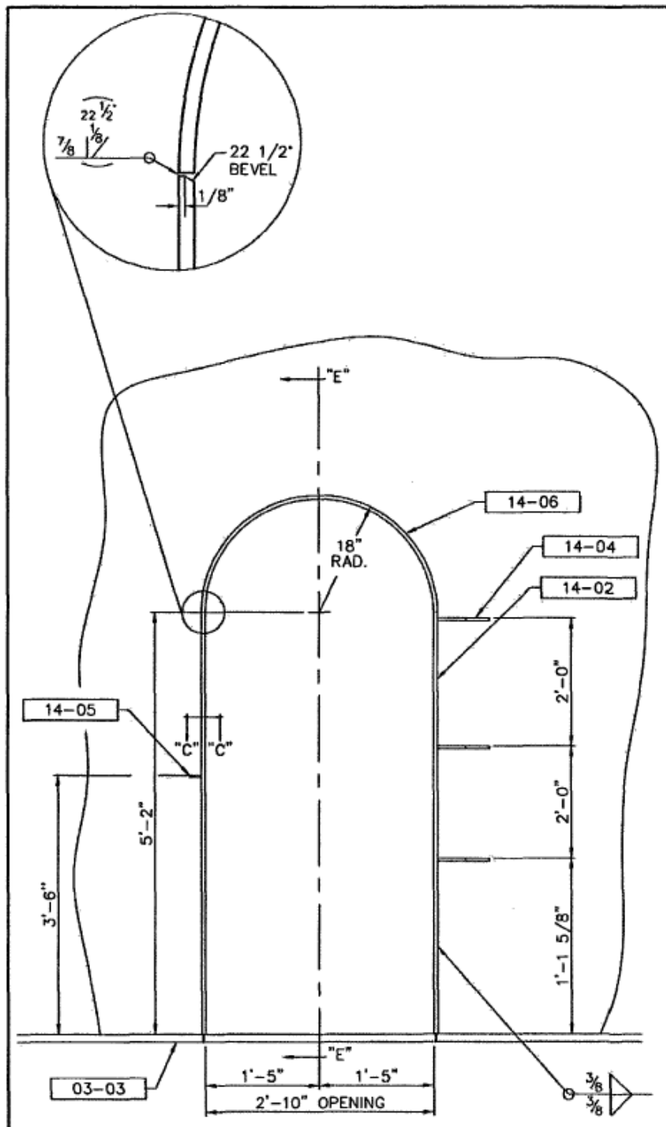

FRONT ELEVATION
DOOR FRAME

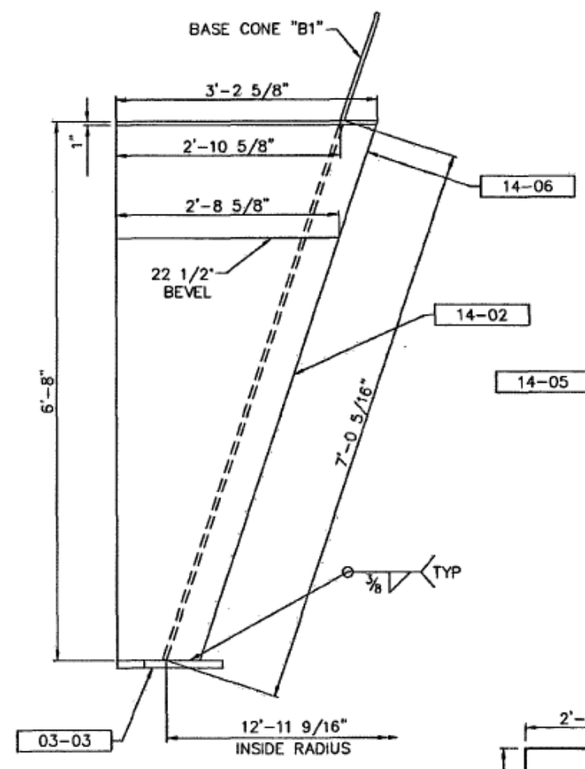

SECTION "E-E"

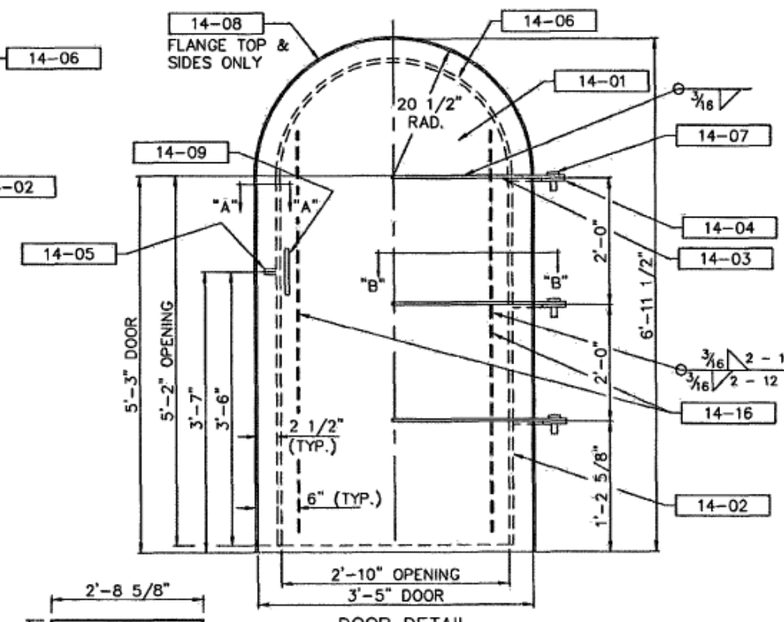

DOOR DETAIL

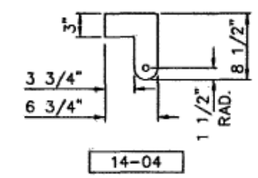

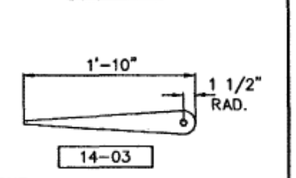

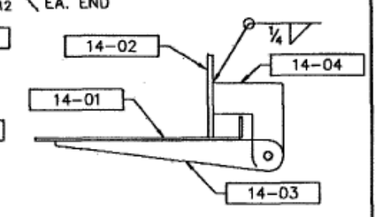

SECTION "B-B"

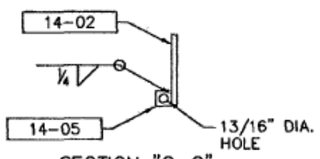

SECTION "C-C"

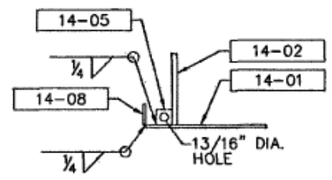

SECTION "A-A"

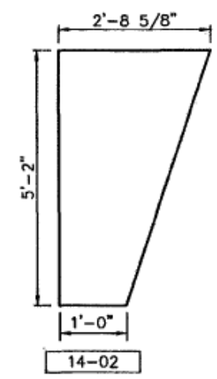

NOTES:
1. SEE DWG. 02A FOR DOOR ORIENTATION.

AS BUILT

COMMONWEALTH OF VIRGINIA
GERALD A. BURKE
Lic. No. 034963
7-17-15
PROFESSIONAL ENGINEER

REV.	BY:	DATE	REMARKS

CALDWELL Since 1847
Water · Energy · Industrial

ROANOKE, VIRGINIA
250,000 GALLON PEDESPHERE

BY: AMK
TITLE: 36" x 80" BASE DOOR
DATE: 07/07/15
DRAWING NO.: E-8344 14