SHIPPING ITEM	QTY.	PC. MK.	QTY.	MATERIAL REQ'D	DESCRIPTION	UNIT WT.
18-HB-01	2			HEATER BRACKET ASSEMBLY		25
		18-10	1	AN 2" x 2" x 3/8" x 2'-8" LG.	HORZ. BRACKET	
		18-11	1	AN 2" x 2" x 3/8" x 2'-5 1/8" LG.	DIAG. BRACKET	
18-01	11			FB 1/4" x 2" x 6" LG.	CONDUIT LUG	
18-03	11			AN 4" x 4" x 1/4" x 4"	LIGHT MOUNT	
18-06	3			FB 1/4" x 2" x 4'-4" LG. (BENT)	CABLE BRACKET	
K1-MP-48	1			ST MOUNTING PLATE ASSEMBLY		

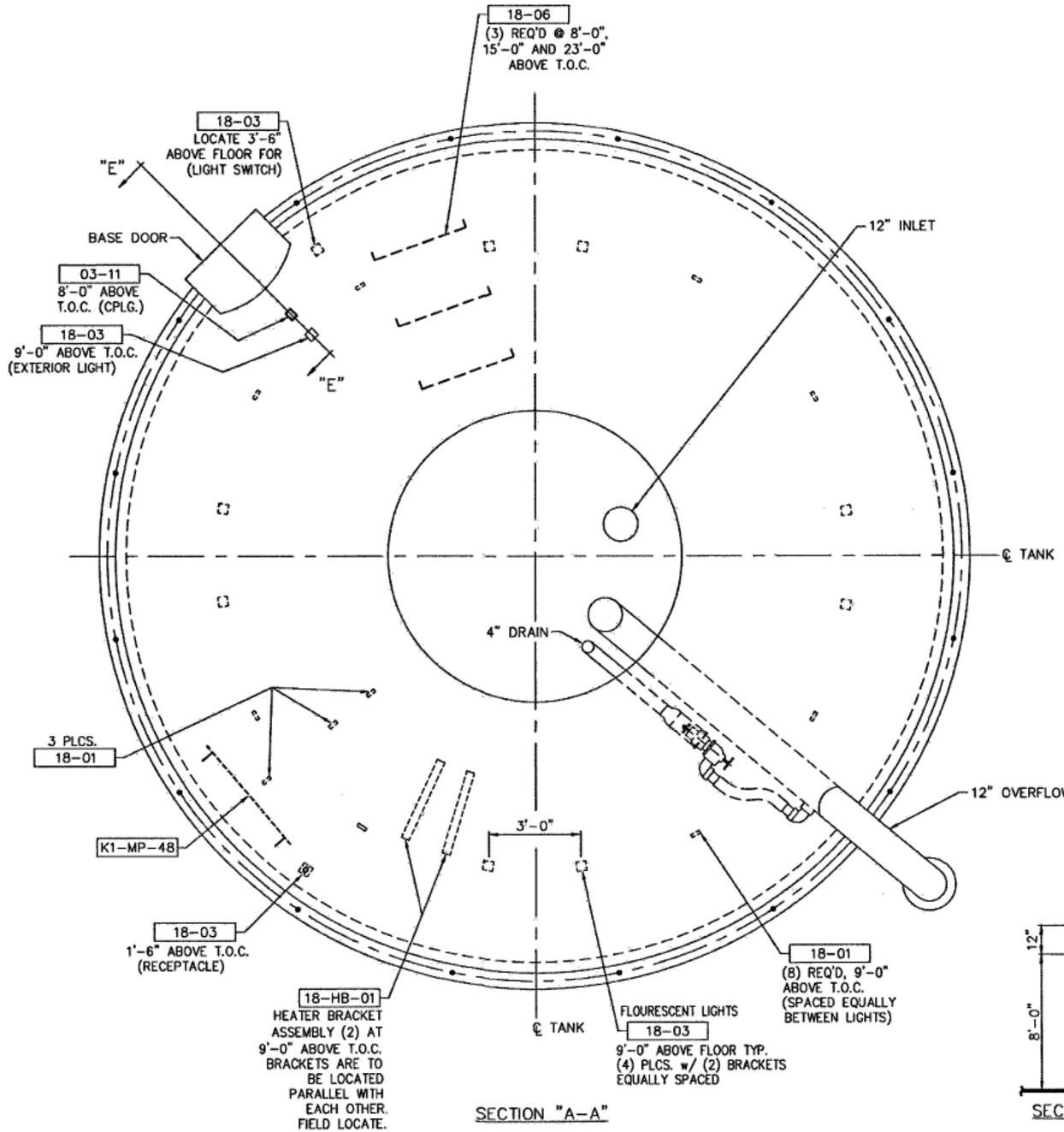

SECTION "A-A"

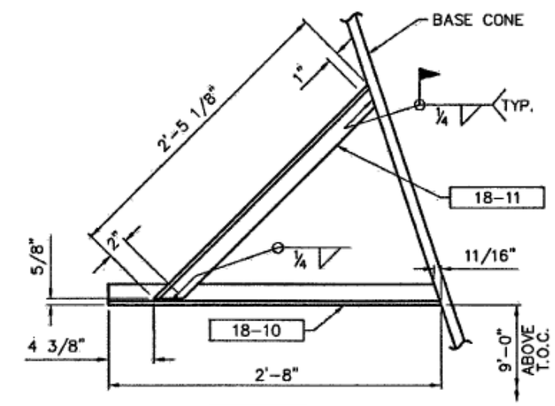

18-HB-01
HEATER BRACKET ASSEMBLY
(2) REQ'D
(1) AS SHOWN
(1) OPPOSITE HAND

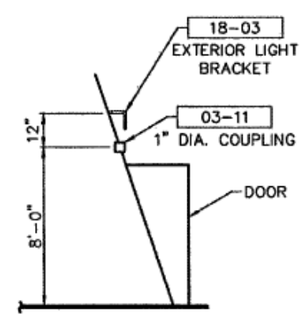

SECTION "E-E"

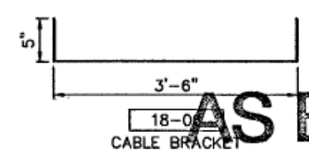

AS BUILT

COMMONWEALTH OF VIRGINIA
GERALD A. BURKE
Lic. No. 034963
7-17-15
PROFESSIONAL ENGINEER

REV.	BY:	DATE	REMARKS

CALDWELL Since 1887 Water - Energy - Industrial

ROANOKE, VIRGINIA
250,000 GALLON PEDESPHERE

BY: AMK
TITLE: ELECTRICAL CLIP DETAILS
DATE: 07/07/15
DRAWING NO.: E-8344 18A