SHIPPING ITEM	QTY.	PC. MK.	QTY.	MATERIAL REQ'D	DESCRIPTION	UNIT WT.
K1-MP-48	1			ELECTRICAL MOUNTING PLATE (PEDESPHERE)		200
		K1-01	1	PL 1/4" x 48" x 48"	MOUNTING PLATE	
		K1-02	2	PL 1/4" PLATE	PLATE SUPPORT	

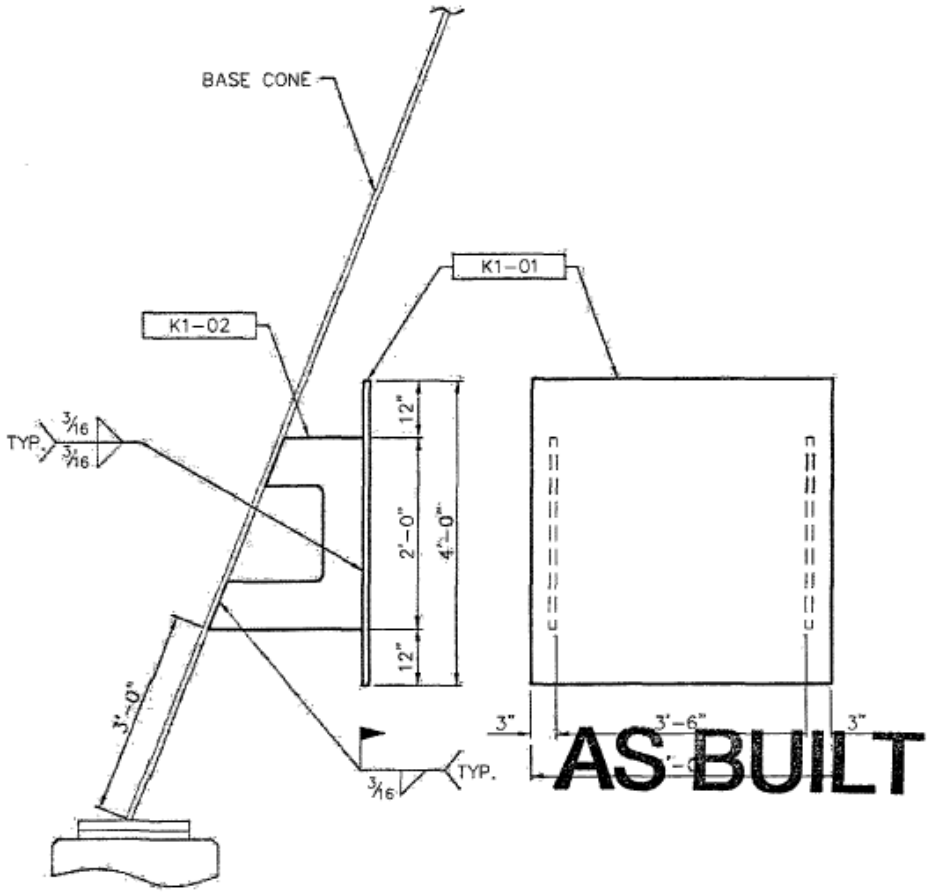

AS BUILT

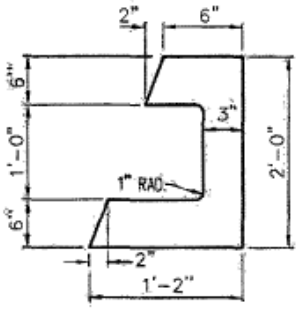

K1-02

CALDWELL
Since 1887
Water · Energy · Industrial

TITLE: ELECTRICAL MOUNTING PLATE (PEDESPHERE)

DRAWING NO.: K1