NOTES:

1. THIS PLAT WAS PREPARED WITHOUT THE BENEFIT OF A CURRENT TITLE REPORT BY A LICENSED ATTORNEY. THERE MAY EXIST ENCUMBRANCES WHICH AFFECT THE PROPERTY NOT SHOWN HEREON.
2. THE SUBJECT PROPERTY LIES WITHIN FLOODWAY ZONE "X" AS SHOWN ON THE FEMA FLOOD INSURANCE RATE MAP PANEL NO. 51161C0164G, DATED SEPTEMBER 28, 2007.
3. LOCATION OF UNDERGROUND UTILITIES IS BASED ON FIELD LOCATION OF VISIBLE UTILITIES, AVAILABLE RECORDS, AND AS LOCATED BY "UNDERGROUND LOCATOR SERVICE", TICKET # B924501153. THERE MAY BE UTILITIES WHICH AFFECT THIS PROPERTY NOT SHOWN HEREON. CONTRACTOR SHALL CALL "MISS UTILITY" TO VERIFY LOCATION OF ANY UNDERGROUND UTILITIES PRIOR TO ANY CONSTRUCTION.
4. REFERENCE: OFFICIAL SURVEY AND MAP OF ROANOKE, VA, SHEET No. 1, S.W. SEC. COPYRIGHT 1911, CITY OF ROANOKE, VIRGINIA.
5. REFERENCE: SURVEY FOR INVESTORS SAVINGS BANK BY BALZER AND ASSOCIATES, INC. DATED SEPTEMBER 23, 1988 AND RECORDED IN D.B. 1590, PG. 1167. (TAX No. 1012203)
6. REFERENCE: SURVEY, PROPERTY OF M.B. PACE BY C.B. MALCOLM DATED AUGUST 3, 1927 AND RECORDED IN D.B. 501, PG. 188. (TAX No. 1012213)
7. REFERENCE: PLAT MADE FOR BRANCH BUILDING CORP. BY C.B. MALCOLM DATED SEPTEMBER 1947 AND RECORDED IN D.B. 757, PG. 135. (TAX No. 1012211)
8. REFERENCE: PLAT SHOWING PROPERTY OF TEXAS TAVERN, INC. BY BUFORD T. LUMSDEN & ASSOCIATES, P.C. DATED MARCH 21, 1983 AND RECORDED IN D.B. 1486, PG. 1491. (TAX No. 1012208)
9. REFERENCE: SURVEY FOR DONALD S. & RUTH F. BARROWS BY BALZER & ASSOCIATES DATED MARCH 4, 1985 AND RECORDED IN D.B. 1516, PG. 223. (TAX No.1012207)
10. REFERENCE: SURVEY FOR FRANKFURTER INVESTMENT CO. BY JACK G. BESS DATED JULY 29, 1987 AND RECORDED IN D.B. 1566, PG. 673. (TAX No. 1012205, 1012206)
11. THIS PLAT IS BASED ON A CURRENT FIELD SURVEY

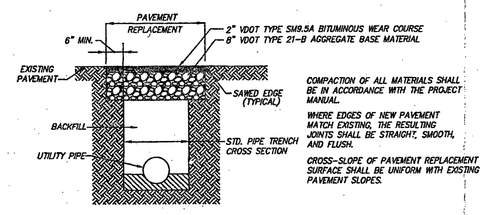

ON-SITE PAVEMENT REPLACEMENT
NO SCALE

GENERAL REQUIREMENTS & INSPECTIONS

EXISTING UNDERGROUND UTILITIES SHOWN HEREON ARE A COMPILATION OF AVAILABLE RECORDS, FIELD SURVEYS, AND AS MARKED BY THE UNDERGROUND LOCATOR SERVICE, TICKET # B924501153. THERE MAY BE UTILITIES WHICH AFFECT THE PROPERTY THAT ARE NOT SHOWN HEREON. CONTRACTOR SHALL CALL "MISS UTILITY" TO VERIFY LOCATION OF ANY UNDERGROUND UTILITIES PRIOR TO ANY CONSTRUCTION.

THE CONTRACTOR SHALL COORDINATE WITH THE WESTERN VIRGINIA WATER AUTHORITY (WVWA) PRIOR TO ANY WORK BEING PERFORMED. A MINIMUM 72 HOURS NOTICE IS REQUIRED. UNLESS OTHERWISE NOTED, ALL WATERLINE WORK SHALL BE PERFORMED BY THE CONTRACTOR, WITH INSPECTIONS AS FOLLOWS:

- WORK FROM THE MAIN UP TO AND INCLUDING THE NEW METER VAULT IS TO BE INSPECTED BY THE WVWA.
- WORK ON THE PRIVATE SIDE OF THE METER VAULT IS TO BE INSPECTED BY THE CITY OF ROANOKE BUILDING INSPECTOR'S OFFICE.

SCOPE OF WORK & MATERIAL REQUIREMENTS

THE CONTRACTOR SHALL PROVIDE ALL MATERIALS AND LABOR REQUIRED TO CONSTRUCT A NEW 2" WATER SERVICE LATERAL, METER VAULT, AND 2" SITE WATERLINE AS REQUIRED TO INTERCONNECT WITH NEW 2" WATERLINE FROM BUILDING AS SHOWN ON PLUMBING SHEETS. WVWA MAKES THE ACTUAL TAP, ALL OTHER MATERIALS AND LABOR BY CONTRACTOR.

~~FURTHERMORE, THE CONTRACTOR SHALL COORDINATE WITH PLUMBING SHEETS AND THE WVWA TO REMOVE THE EXISTING 5/8" CHURCH AVENUE WATER METER FROM SERVICE. IT IS ANTICIPATED THAT THIS WILL ENTAIL ABANDONING THE PRIVATE PIPING AND CAPPING THE SUPPLYSIDE OF THE METER VALVE ONCE THE WVWA REMOVES THE METER.~~

ALL FABRICATION, MATERIALS, AND INSTALLATION SHALL BE IN STRICT CONFORMANCE WITH THE CONSTRUCTION STANDARDS AND SPECIFICATIONS OF THE WVWA.

ALL WATERLINE SHALL BE 2" TYPE "K" COPPER. INSTALL WITH MIN. 36" COVER.

NEW WATER VAULT SHALL BE PER WVWA CONSTRUCTION STANDARD W-05.

METER BODY WILL BE PROVIDED AND INSTALLED BY THE WVWA FOLLOWING PAYMENT OF FEES AND COMPLETED INSTALLATION OF LATERAL AND VAULT.

ON-SITE PAVEMENT REPLACEMENT SHALL BE AS DETAILED HEREIN.

SECOND STREET PAVEMENT REPLACEMENT SHALL BE IN ACCORDANCE WITH WVWA STANDARD DETAIL G-02.

SAW-CUT AND REPLACE ON-SITE CONCRETE AND WALKS, AND REPLACE TO MATCH EXISTING.

SAW-CUT EXISTING PUBLIC CONCRETE SIDEWALK AT NEAREST JOINTS. REPLACE AFFECTED AREAS WITH CITY OF ROANOKE STANDARD CONCRETE SIDEWALK AND CURBING (AS APPLICABLE), COLOR, FINISH, AND JOINT PATTERN SHALL MATCH EXISTING. PROVIDE PRE-MOLDED ELASTOMERIC EXPANSION JOINTS WHERE NEW MEETS EXISTING.

PROVIDE TRAFFIC CONTROL MEASURES AS REQUIRED BY THE CITY OF ROANOKE TRAFFIC DEPARTMENT.

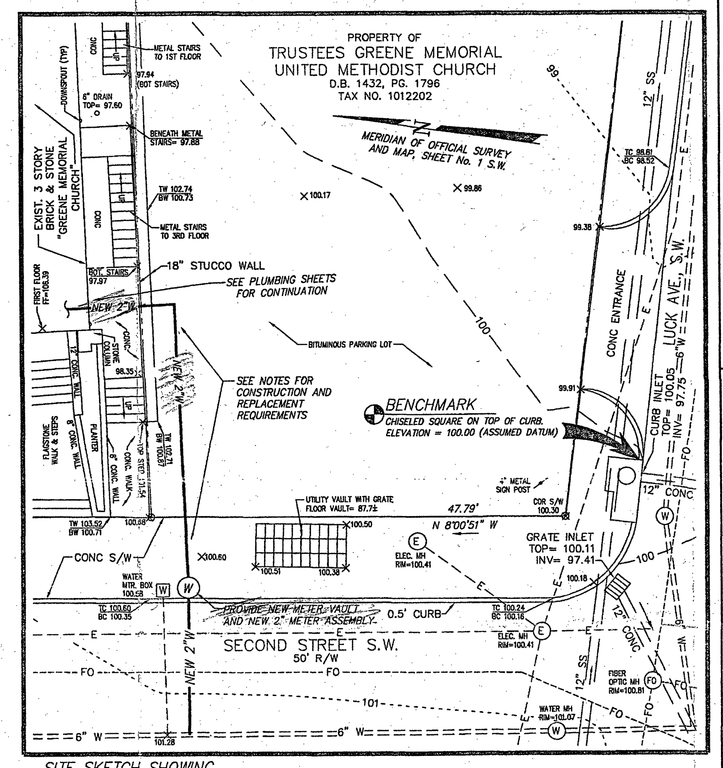

SITE SKETCH SHOWING
NEW DOMESTIC WATER SERVICE
FOR
GREENE MEMORIAL CHURCH
402 2ND STREET S.W.
CITY OF ROANOKE, VIRGINIA
Scale: 1"=10'
W.O. 09-0065 10/23/09

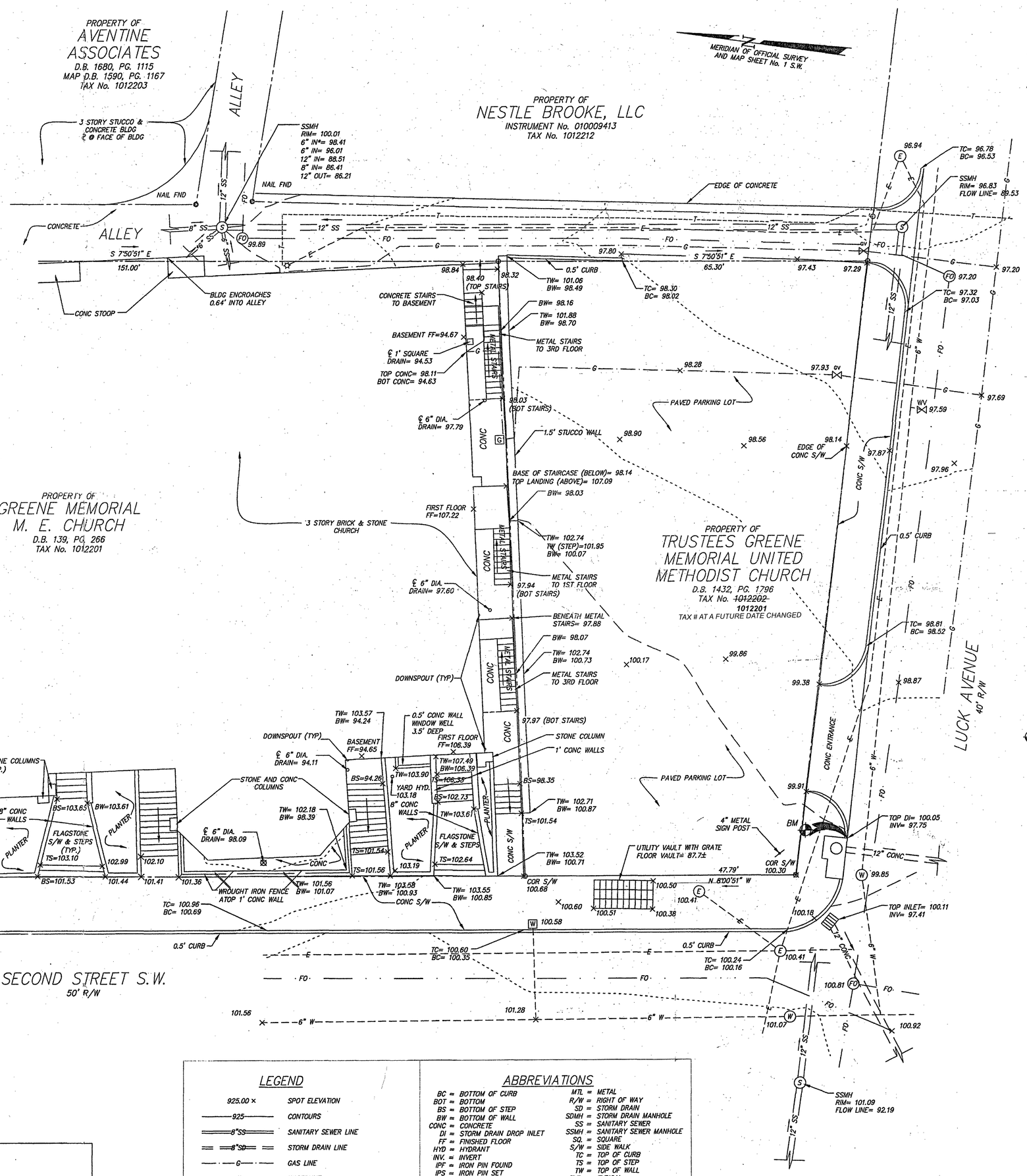

BENCHMARK
CHISELED SQUARE ON TOP OF CURB
ELEVATION = 100.00 (ASSUMED)

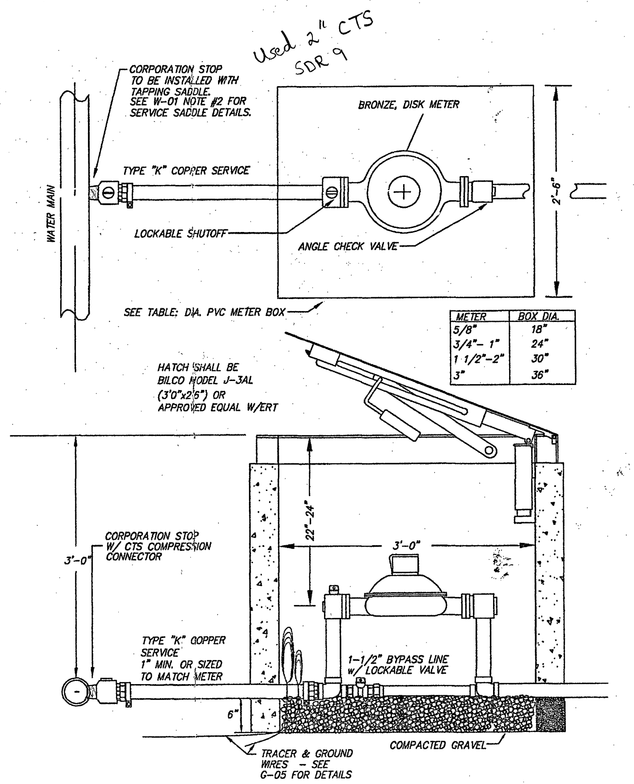

METER	BOX DIA.
5/8"	18"
3/4"- 1"	24"
1 1/2"-2"	30"
3"	36"

WESTERN VIRGINIA WATER AUTHORITY - CONSTRUCTION STANDARDS
COMMERICAL WATER SERVICE
NO SCALE

LEGEND

925.00 ×	SPOT ELEVATION
925	CONTOURS
8"SS	SANITARY SEWER LINE
8"SD	STORM DRAIN LINE
G	GAS LINE
W	WATERLINE
FO	UNDERGROUND FIBER OPTIC
E	UNDERGROUND ELECTRIC LINE
T	UNDERGROUND TELEPHONE LINE
	PROPERTY LINE
E W	ELECTRIC METER / WATER METER
GV WV	GAS VALVE / WATER VALVE
	BENCHMARK
	PROPERTY CORNER
	MONUMENTATION FOUND
	LIGHT POLE
E W	ELECTRIC/ WATER MANHOLE
℄	CENTERLINE

ABBREVIATIONS

BC = BOTTOM OF CURB	MTL = METAL
BOT = BOTTOM	R/W = RIGHT OF WAY
BS = BOTTOM OF STEP	SD = STORM DRAIN
BW = BOTTOM OF WALL	SDMH = STORM DRAIN MANHOLE
CONC = CONCRETE	SS = SANITARY SEWER
DI = STORM DRAIN DROP INLET	SSMH = SANITARY SEWER MANHOLE
FF = FINISHED FLOOR	SQ. = SQUARE
HYD = HYDRANT	S/W = SIDE WALK
INV. = INVERT	TC = TOP OF CURB
IPF = IRON PIN FOUND	TS = TOP OF STEP
IPS = IRON PIN SET	TW = TOP OF WALL
MH = MANHOLE	TYP. = TYPICAL

PARTIAL TOPOGRAPHIC SURVEY
FOR
GREENE MEMORIAL M. E. CHURCH

PREPARED FOR RIFE & WOOD ARCHITECTS

SHOWING EXISTING CONDITIONS ON TAX PARCEL 1012202 AND A PORTION OF TAX PARCEL 1012201

SITUATE 402 2ND STREET S.W.
CITY OF ROANOKE, VIRGINIA

Drawn:	C.L. Hurd
Checked:	F.B. Caldwell
Date:	October 19, 2009
Scale:	1"=10'
Tax Parcel:	1012201 & 202
Field Book:	Wes-66
W.O.:	09-0065

CWA
CALDWELL WHITE ASSOCIATES
ENGINEERS / SURVEYORS / PLANNERS
4208 MELROSE AVENUE, N.W.
Post Office Box 6260
ROANOKE, VIRGINIA 24017
Telephone: (540) 366-9402 ; Fax: (540) 366-8702
EMAIL: CWARDANOKE @ AOL.COM

REVISIONS	BY
1 CONTRACT 3/19/10	JWBC
CONTRACT DOC. REVISED 4/05/2010	

COMMONWEALTH OF VIRGINIA
CORBIN L. WHITE
License No. 23843
3-23-10
PROFESSIONAL ENGINEER

SITE PLAN, NOTES, & DETAILS

Greene Memorial United Methodist Church
402 2nd St., SW
Roanoke, VA 24011

Rife + Wood ARCHITECTS
Roanoke, VA 24018 (540) 344-6015

DATE:	NOV 2, 2009
SCALE:	AS NOTED
DRAWN:	BGC
JOB:	0937
SHEET:	C1
OF	SHEETS