1. ALL METERS ARE TO BE PROVIDED AND INSTALLED BY PARTICIPATING UTILITY AT OWNER/DEVELOPER'S EXPENSE. METER BOX, SERVICE, AND SETTER TO BE FURNISHED AND INSTALLED BY OWNER/DEVELOPER IN ACCORDANCE WITH THE MINIMUM REQUIREMENTS SHOWN BELOW.
2. SADDLES MUST BE USED WITH ALL PLASTIC & DUCTILE IRON PIPE. SERVICE SADDLES SHALL BE USED IN ACCORDANCE WITH WATER DISTRIBUTION PIPING SPECIFICATION. SERVICE SADDLES FOR PLASTIC PIPE SHALL BE: POWERSEAL 3417, OR 3412AS, ROMAC 202S, OR 306, OR FORD METER F202 OR F202S. FOR DUCTILE IRON PIPE USE THE ABOVE OR POWERSEAL 3413, ROMAC 202 OR FORD METER F202.
3. CORPORATION STOP SHALL BE FORD F600-4-G, MUELLER H-15000 OR APPROVED EQUAL.
4. METER BOXES LOCATED IN AREAS SUBJECT TO VEHICULAR TRAFFIC SHALL BE CONCRETE WITH H-20 RATED TRAFFIC BEARING LATCH. ALL OVER METER BOXES SHALL BE CARSON/MID-STATES PLASTICS, INC. PLASTIC BOX, ADS CORRUGATED HDPE BOX, OR APPROVED EQUAL. MINIMUM METER BOX & LID DIAMETERS SHALL BE IN ACCORDANCE WITH SIZING CHART BELOW.
5. SERVICE SHALL BE "K" TYPE COPPER OR P.E. 4710 ,CTS O.D., MINIMUM CELL CLASS 445474E AND 445474D.
6. COPPER METER SETTERS TO BE FORD, A.Y. MCDONALD OR APPROVED EQUAL WITH ANGLE DUAL CHECK VALVE AND BYPASS HAVING LOCKABLE SHUTOFF VALVE.
7. SERVICES REQUIRING METERS LARGER THAN 2-INCH SHALL BE REVIEWED BY THE PARTICIPATING UTILITY ON A CASE BY CASE BASIS.

TRAFFIC BEARING LOCATION | NON TRAFFIC BEARING LOCATION

TRAFFIC BEARING VAULT AND H-20 RATED HATCH SHALL BE SIZED IN ACCORDANCE WITH DIMENSIONAL REQUIREMENTS SHOWN BELOW.

SIZING CHART

METER SIZE	BOX DIA (MIN.)	LID DIA (MIN.)	COVER & LID MODEL (OR APPROVED EQUAL)
5/8"	18"	11½"	FORD A22-T OR AY MCDONALD 74M52AT
3/4" - 1"	24"	20"	FORD MC-24-T OR AY MCDONALD 74M24 T
1 1/2"-2"	30"	20"	FORD MC-30-T OR AY MCDONALD 74M30 T

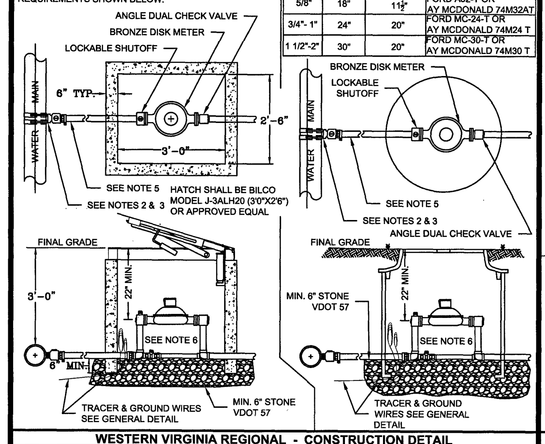

WESTERN VIRGINIA REGIONAL - CONSTRUCTION DETAIL

COMMERCIAL WATER SERVICE METER SIZES 5/8" – 2" 01/01/14 W-5

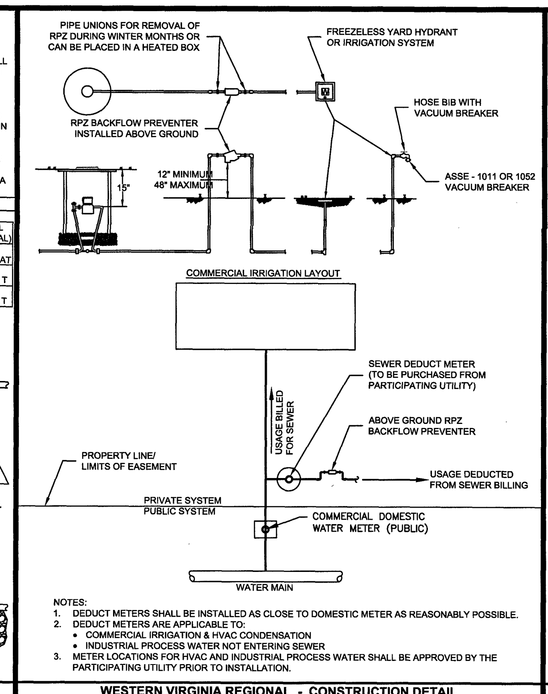

NOTES:
1. DEDUCT METERS SHALL BE INSTALLED AS CLOSE TO DOMESTIC METER AS REASONABLY POSSIBLE.
2. DEDUCT METERS ARE APPLICABLE TO:
   - COMMERCIAL IRRIGATION & HVAC CONDENSATION
   - INDUSTRIAL PROCESS WATER NOT ENTERING SEWER
3. METER LOCATIONS FOR HVAC AND INDUSTRIAL PROCESS WATER SHALL BE APPROVED BY THE PARTICIPATING UTILITY PRIOR TO INSTALLATION.

WESTERN VIRGINIA REGIONAL - CONSTRUCTION DETAIL

COMMERCIAL SEWER DEDUCTION METER INSTALLATION 01/01/14 W-6

1. FOR 6" FIRE LINE, EXTERIOR VAULT DIMENSIONS SHALL BE (L x W x H) 6' X 6' X 5' WITH DOMESTIC TAP MADE INSIDE VAULT AS SHOWN BELOW.
2. FOR 8" FIRE LINE EXTERIOR VAULT DIMENSIONS SHALL BE (L X W X H) 6' X 6' X 6' WITH DOMESTIC TAP MADE OUTSIDE VAULT. BALL VALVE WITH LOCKING TABS SHALL BE PROVIDED INSIDE VAULT TO ALLOW FOR ISOLATION OF DOMESTIC METER.
3. SINGLE DETECTOR CHECK VALVE SHALL BE WILKINS 310 DALM , WATTS ES-S500Y - BP, OR APPROVED EQUAL WITH FLANGED END CONNECTIONS, BYPASS ASSEMBLY, AND ONE OS&Y GATE VALVE.
4. DOMESTIC SHALL BE TYPE K COPPER WITH GRIP JOINT FITTINGS, BALL VALVE AT TAPPING SADDLE (WITH LOCKING TABS) AND CHECK VALVE ON OUTLET.
5. DOMESTIC METER TO BE SUPPLIED BY OWNER AND INSTALLED BY VENDOR.
6. "UNI FLANGE" ADAPTOR FLANGE, OR APPROVED EQUAL, OR FLANGED - PLAIN END PIPING REQUIRED FOR INLET AND OUTLET PIPING.
7. VAULT TO BE INSTALLED ON MIN. 6" COMPACTED VDOT #57 STONE WITH FILTER FABRIC PLACED BETWEEN BOTTOM OF VAULT AND STONE BEDDING. FILTER FABRIC TO EXTEND VERTICALLY A MINIMUM OF 6" ON ALL FOUR SIDES OF VAULT.

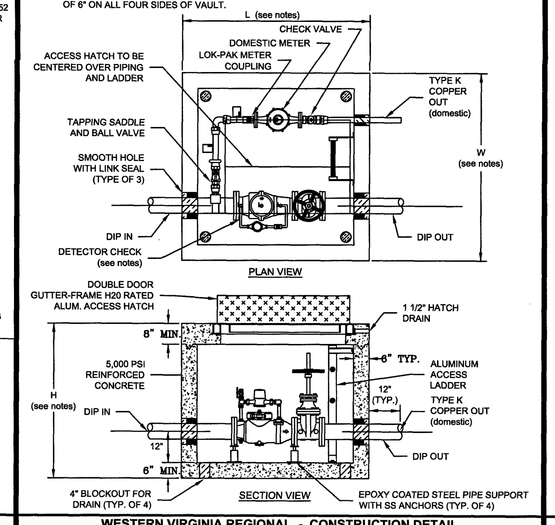

WESTERN VIRGINIA REGIONAL - CONSTRUCTION DETAIL

COMMERCIAL METER VAULT 01/01/14 W-7

1. FILTER FABRIC TO BE INSTALLED BETWEEN BOTTOM OF PIPE AND STONE BEDDING. FABRIC TO EXTEND MINIMUM OF 6" FROM BOTTOM OF VAULT (FULL CIRCUMFERENCE).

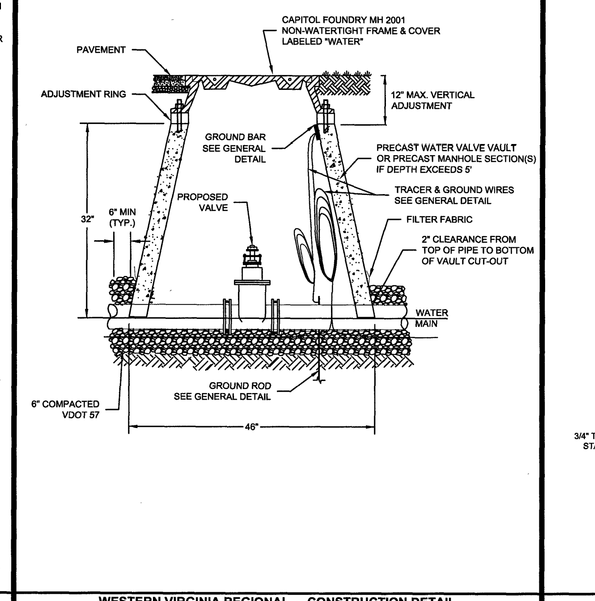

WESTERN VIRGINIA REGIONAL - CONSTRUCTION DETAIL

WATER LINE VALVE & VAULT 01/01/14 W-9

VERTICAL GRADE: MINIMUM 1% SLOPE
1. MINIMUM RETENTION TIME SHOULD BE 30 MINUTES AT PEAK FLOW.
2. GREASE INTERCEPTOR SHOULD BE DESIGNED TO WITHSTAND TRAFFIC LOADS IF APPLICABLE.
3. FRAMES AND COVERS SHALL BE CAST IRON & WATERTIGHT. NO PLASTIC COVERS SHALL BE ALLOWED.
4. A NON - MONOLITHIC UNIT SHALL HAVE THE FOLLOWING INSTALLED PER MANUFACTURER'S SPEC:
   A.) A CONSEAL CS - 102 SUPER SEAL WATER SEALANT (OR EQUIVALENT) IN THE JOINT.
   B.) 24" CONSEAL CS - 212 POLYOLEFIN BACKED EXTERIOR WRAP (OR EQUIVALENT) CENTERED OVER THE EXTERIOR OF THE JOINT.
5. GREASE INTERCEPTOR SHALL BE INSPECTED AND APPROVED BY THE PARTICIPATING UTILITY PRIOR TO SITE REGRADING WATER SERVICE CONNECTION.
6. FORTY-EIGHT (48) HOURS PRIOR TO INSTALLATION, THE CONTRACTOR SHALL COMPLETE THE FOLLOWING:
   A.) CONTACT PARTICIPATING UTILITY TO DETERMINE PROPER SUBMITTAL AND INSPECTION PROCEDURE.
   B.) FOR UNITS INSTALLED INTO THE WESTERN VIRGINIA WATER AUTHORITY'S SYSTEM:
      1.) SUBMIT SHOP DRAWINGS TO C. ALTICE, 601 S JEFFERSON ST, SUITE 300, ROANOKE, VA 24011.
      2.) CALL (540) 537-3460 TO SCHEDULE GREASE INTERCEPTOR INSPECTION. THE INSPECTION SHALL OCCUR PRIOR TO THE CONTRACTOR COVERING THE GREASE INTERCEPTOR.
7. CONCRETE SHALL BE TYPE III AND CONFORM TO ASTM C150.
8. ALL OTHER DETAILS SHALL BE IN ACCORDANCE WITH THE LATEST REVISION OF ASTM C1613.
9. ALL PVC PIPES SHALL EXTEND 5" ABOVE WATER SURFACE.
10. IF INTERCEPTOR IS SUBJECTED TO TRAFFIC, ACCESS FOR BAFFLE TEES SHALL BE TRAFFIC RATED CAST IRON FRAME & COVER.

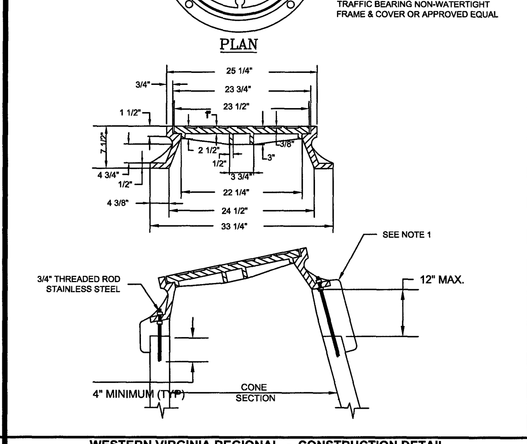

WESTERN VIRGINIA REGIONAL - CONSTRUCTION DETAIL

VAULT FRAME AND COVER 01/01/14 W-16

NOTES:
1. MINIMUM RETENTION TIME SHOULD BE 30 MINUTES AT PEAK FLOW.
2. GREASE INTERCEPTOR SHOULD BE DESIGNED TO WITHSTAND TRAFFIC LOADS IF APPLICABLE.
3. FRAMES AND COVERS SHALL BE CAST IRON & WATERTIGHT. NO PLASTIC COVERS SHALL BE ALLOWED.
4. "GREASE" SHALL BE CAST INTO COVER.
5. A NON - MONOLITHIC UNIT SHALL HAVE THE FOLLOWING INSTALLED PER MANUFACTURER'S SPEC:
   A.) A CONSEAL CS - 102 SUPER SEAL WATER SEALANT (OR EQUIVALENT) IN THE JOINT.
   B.) 24" CONSEAL CS - 212 POLYOLEFIN BACKED EXTERIOR WRAP (OR EQUIVALENT) CENTERED OVER THE EXTERIOR OF THE JOINT.
6. GREASE INTERCEPTOR SHALL BE INSPECTED AND APPROVED BY THE PARTICIPATING UTILITY PRIOR TO SITE REGRADING WATER SERVICE CONNECTION.
6. FORTY-EIGHT (48) HOURS PRIOR TO INSTALLATION, THE CONTRACTOR SHALL COMPLETE THE FOLLOWING:
   A.) CONTACT PARTICIPATING UTILITY TO DETERMINE PROPER SUBMITTAL AND INSPECTION PROCEDURE.
   B.) FOR UNITS INSTALLED INTO THE WESTERN VIRGINIA WATER AUTHORITY'S SYSTEM:
      1.) SUBMIT SHOP DRAWINGS TO C. ALTICE, 601 S JEFFERSON ST, SUITE 300, ROANOKE, VA 24011.
      2.) CALL (540) 537-3460 TO SCHEDULE GREASE INTERCEPTOR INSPECTION. THE INSPECTION SHALL OCCUR PRIOR TO THE CONTRACTOR COVERING THE GREASE INTERCEPTOR.
7. CONCRETE SHALL BE TYPE III AND CONFORM TO ASTM C150.
8. ALL OTHER DETAILS SHALL BE IN ACCORDANCE WITH THE LATEST REVISION OF ASTM C1613.
9. ALL PVC PIPES SHALL EXTEND 5" ABOVE WATER SURFACE.
10. IF INTERCEPTOR IS SUBJECTED TO TRAFFIC, ACCESS FOR BAFFLE TEES SHALL BE TRAFFIC RATED CAST IRON FRAME & COVER.

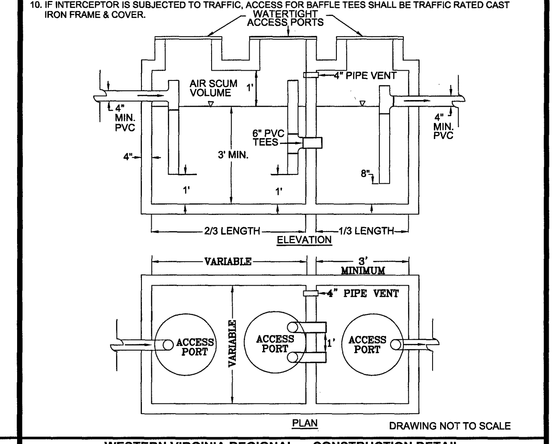

WESTERN VIRGINIA REGIONAL - CONSTRUCTION DETAIL

GREASE INTERCEPTOR 01/01/14 S-17

1. PUBLIC HYDRANTS SHALL BE PAINTED SILVER WITH AN OIL-BASED PAINT. PRIVATE HYDRANTS SHALL ALSO BE PAINTED SILVER WITH AN OIL-BASED PAINT UNLESS OTHERWISE SPECIFIED BY THE JURISDICTIONAL FIRE MARSHALL.
2. FIRE HYDRANT SHALL BE INSTALLED 2' MIN. AND 4' MAX. FROM BACK OF CURB OR 6' MIN. AND 12' MAX. FROM EDGE OF PAVEMENT WHEN CURB IS NOT PRESENT. FIRE HYDRANT TO BE INSTALLED WITHIN RIGHT-OF-WAY OR EASEMENT LINE.
3. AREA AROUND HYDRANT AT A RADIUS OF 4' TO BE LEVEL AND UNOBSTRUCTED.
4. WATERPROOF BAGS OR OUT OF SERVICE RINGS SHALL BE PLACED OVER ALL NEWLY INSTALLED FIRE HYDRANTS.
5. HIGH PRESSURE (OVER 120 PSI) REQUIRES THE USE OF ALL 3 RESTRAINTS.
6. IF DURING CONSTRUCTION THE DEADEND, WHICH IS NOTED TO BE ABOVE THE DRAIN OUTLETS OF THE PROPOSED HYDRANT, THE PARTICIPATING UTILITY WILL BE NOTIFIED IMMEDIATELY SO THAT THE HYDRANT CAN BE RELOCATED TO A SUITABLE LOCATION, OMITTED, OR THE DRAIN HOLE PLUGGED.
7. TWO WRAPS OF TRACER WIRE SHALL BE WRAPPED AROUND BASE OF HYDRANT.
8. APPROVED MODELS - AVK MODEL 2780, AFC MODEL B-94-B-5, MUELLER CENTURION A423, KENNEDY K81D EQUIVALENT.

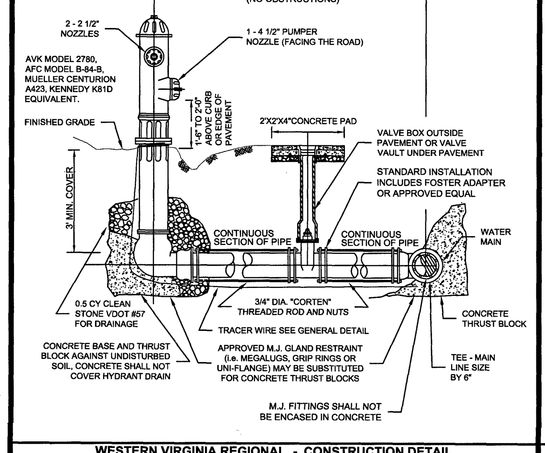

WESTERN VIRGINIA REGIONAL - CONSTRUCTION DETAIL

FIRE HYDRANT ASSEMBLY 01/01/14 W-17

1. TRAFFIC BEARING BOX AND LID REQUIRED IN TRAFFIC AREAS (CAPITOL FOUNDRY VB-9"S).
2. SEWER LATERAL AND CLEANOUT PIPING SHALL BE ASTM D3034 SDR 26. SEWER LATERAL FITTINGS SHALL BE OF SAME SDR RATING AS THE SEWER MAIN. SCHEDULE 40 SOLVENT WELD PIPE AND FITTINGS MAY BE USED FOR THE SEWER LATERAL AND CLEANOUT ASSEMBLY WITH APPROVAL FROM THE PARTICIPATING UTILITY.
3. ALL PIPE SHALL BE OF SAME SIZE.
4. NO BENDS ARE ALLOWED IN THE LATERAL FROM THE MAIN TO THE CLEANOUT STACK WYE. (EXCEPT FOR DEEP SEWER, AS SHOWN BELOW).
5. ALL MAIN LINE TAPS ON ACTIVE MAINS SHALL BE PERFORMED BY PARTICIPATING UTILITY.
6. PIPING ON PRIVATE SIDE OF CLEANOUT TO BE INSTALLED PER GOVERNING JURISDICTION REQUIREMENTS.
7. MINIMUM LATERAL SIZE: 4" FOR RESIDENTIAL SERVICE, 6" FOR NON-RESIDENTIAL SERVICE.
8. SEWER CLEANOUTS SHALL BE SAME SIZE AS SEWER LATERAL.
9. MINIMUM COVER FOR ALL SEWER LATERALS SHALL BE THREE (3) FEET.
10. PROPERTY OWNER RESPONSIBLE FOR INSTALLING CLEANOUT ON PROPERTY LINE (IN ACCORDANCE WITH THIS DETAIL) WHEN MAINTENANCE OCCURS.
11. LOWEST SERVED FINISHED FLOOR ELEVATION SHALL BE A MINIMUM OF THREE FEET (3') ABOVE THE TOP OF THE MAIN AT THE POINT WHERE THE SERVICE LATERAL CONNECTS TO THE MAIN.
12. WHEN CONNECTING TO EXISTING LATERAL USE FERNCO FLEXIBLE COUPLING.

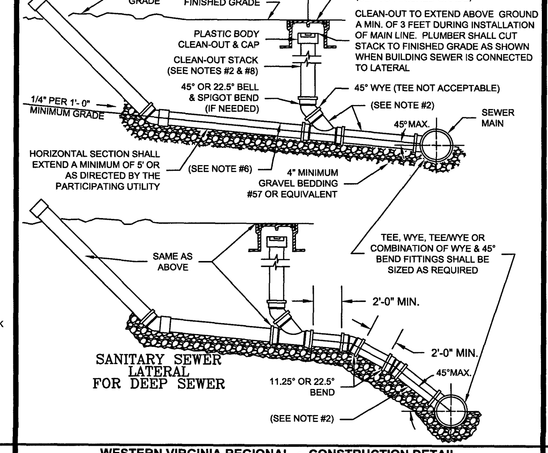

WESTERN VIRGINIA REGIONAL - CONSTRUCTION DETAIL

SANITARY SEWER LATERAL 01/01/14 S-6

1. TRACER WIRES SHALL BE INSTALLED USING MANHOLES, TRACER WIRE ACCESS BOXES, VALVE BOXES OR VAULTS, WATER METERS AND FIRE HYDRANTS AS ACCESS POINTS.
2. FOR WATER AND SEWER INSTALLED BY OPEN TRENCHING, HORIZONTAL DIRECTIONAL DRILLING, OR PIPE BURSTING, TRACER WIRE SHALL BE NEPTCO TRACE-SAFE WATER BLOCKING TRACER WIRE OR APPROVED EQUAL. TRACER WIRE SHALL BE A 19 AWG SOLID COPPER CONDUCTOR WITH POLYETHYLENE INSULATION SURROUNDED BY A CORE MATERIAL COMPRISED OF HIGH-TENACITY, WOVEN POLYESTER WITH WATER BLOCKING YARNS ENCAPSULATED IN AN ABRASION RESISTANT (GREEN OR BLUE) 30 MIL HDPE JACKET. TRACER WIRE SHALL HAVE A MINIMUM TENSILE STRESS OF 1,800 LBS, AND SHALL NOT CONDUCT AN ELECTRICAL CURRENT IF STRUCK BY LIGHTENING. SPLICES SHALL ONLY BE MADE WITH GEL FILLED CONNECTORS DESIGNED FOR WIRE WITH A WOVEN POLYESTER FIBER CORE SUCH AS NEPTCO TRACE-SAFE WATER BLOCKING CONNECTORS OR APPROVED EQUAL. SPLICES SHALL BE MADE IN ACCORDANCE WITH THE MANUFACTURER'S INSTALLATION INSTRUCTIONS.
3. BOXES SHALL BE ENDICOTT TRACER WIRE WATERTIGHT ACCESS POINTS. SHALL BE MADE USING NEPTCO TS-19-0, WATER BLOCKING BUTT SPLICE CONNECTORS OR APPROVED EQUAL.
4. AT ALL ACCESS POINTS, TRACER WIRE SHALL BE SPLICED USING NEPTCO TS-12-19-0, WATER BLOCKING BUTT SPLICE CONNECTORS OR APPROVED EQUAL. 12 AWG COPPER TRACER WIRE WITH 30 MIL HDPE JACKET SHALL BE CONNECTED IN THE 12 AWG OPENING OF THE BUTT SPLICE CONNECTOR, EXTENDED UP INTO THE ACCESS POINT STRUCTURE, AND ATTACHED TO THE GROUND BAR PER NOTE #10 OF THIS DETAIL. TRACER WIRE SHALL BE COILED IN A MANNER PER NOTE #13 AT ALL ACCESS POINTS. EACH DIRECTION OF PIPE SHALL HAVE AN INDEPENDENT TRACER WIRE EXTENDED TO GROUND BAR OR LID TERMINALS TO ALLOW FOR DIRECTIONALLY INDUCING CURRENT DURING LOCATING. THE 12 AWG COPPER TRACER WIRE SHALL BE OF ADEQUATE LENGTH TO EXTEND FIVE (5) FEET ABOVE THE TOP OF STRUCTURE.
5. WHERE HDPE PIPE IS INSTALLED INTO WITHOUT STEEL CASING PIPE, SUCH AS A DIRECTIONALLY DRILLED CROSSINGS, AND CONNECTED TO DUCTILE IRON PIPE ON EACH END, TRACER WIRE SHALL BE INSTALLED ALONG FULL LENGTH OF HDPE PIPE WITH AN ACCESS POINT INSTALLED AT EACH HORIZOUCTILE IRON TRANSITION. TRACER WIRE SHALL BE CONNECTED TO THE ACCESS POINT IN ACCORDANCE WITH THIS DETAIL.
6. AS-BUILTS SHALL SHOW TRACER WIRE(S) LOCATION AND ACCESS POINT(S).
7. THE TRACER WIRE SHALL BE PLACED ALONG THE LOWER QUADRANT OF THE PIPE. THE WIRE SHALL NOT TOUCH THE PIPE, BUT SHALL BE A MAXIMUM OF 6" FROM THE PIPE. NON-METALLIC SPACERS MAY BE USED TO MAINTAIN A SET DISTANCE FROM THE UTILITY.
8. WHERE LINES ARE GREATER THAN SIX (6) FEET IN DEPTH, WIRE SHALL BE BROUGHT TO THE SURFACE EVERY FIVE-HUNDRED (500) FEET AND PLACED IN A WATER METER BOX OR A DRAINAGE & WATER SOLUTIONS, INC. (OR APPROVED EQUAL) ALL CAST IRON TRACER WIRE ACCESS BOX.
9. THE TRACER WILL BE TESTED BY THE PARTICIPATING UTILITY AS PART OF THE PROJECTS FINAL ACCEPTANCE.
10. THE GROUND WIRE SHALL BE #6 AWG COPPER WIRE AND SHALL BE OF ADEQUATE LENGTH TO EXTEND A MINIMUM OF (5) FIVE FEET BEYOND THE TOP OF THE STRUCTURE. THE END OF THE GROUND WIRED SHALL CONNECT TO THE GROUND BAR OR LID TERMINAL USING A BURNDY KAQU MECHANICAL TERMINAL LUG.
11. GROUND BAR SHALL BE INSTALLED AT EACH LOCATION WHERE GROUND WIRE SURFACES AND CONNECTS TO GROUND BAR OR LID TERMINAL. GROUND BAR SHALL BE COPPER PLATED WITH A MINIMUM DIAMETER OF 5/8" AND SHALL BE BURIED A MINIMUM OF FOUR (4) FEET INTO THE GROUND.
12. THE GROUND BAR SHALL BE STAINLESS STEEL AND SHALL BE ATTACHED USING SS $\frac{3}{8}$" X $1\frac{1}{2}$" SS HEX TAPCON. THE FOLLOWING SHALL BE INSTALLED IN (4) FOUR CENTER HOLES: 10-32SS NUTS, #10 SS WASHERS AND 10-32 X $\frac{3}{8}$ SS PHILLIPS. THE FOURTH HOLE SHALL BE USED FOR A BURNDY KAQU MECHANICAL TERMINAL LUG FOR THE #6 AWG GROUND WIRE. THE ASSEMBLY CAN BE ACQUIRED AT BCS INDUSTRIAL SUPPLY, INC. (540-353-0683) - CLAMP RFC-11. THE ENDS OF THE TRACER WIRES SHALL BE PLACED IN THE GROUND BAR AS SHOWN BELOW.
13. IF USING TRACER WIRE ACCESS BOX AS ACCESS POINT, GROUND BAR WILL NOT BE REQUIRED. THE REMOVABLE LID ON THE ACCESS BOX SHALL CONTAIN TWO SCREW TERMINALS. THE 12 AWG COPPER TRACER WIRE SHALL BE BROUGHT UP IN ACCESS BOX AND CONNECTED TO ONE OF THE SCREW TERMINALS. IF MORE THAN ONE TRACER WIRE IS NECESSARY TO ACCOUNT FOR TOTAL NUMBER OF PIPE DIRECTIONS AT ACCESS BOX, MULTIPLE TRACER WIRES SHALL BE CONNECTED TO THAT SAME SCREW TERMINAL. THE #6 AWG COPPER GROUND WIRE SHALL BE CONNECTED FROM THE GROUND ROD TO THE REMAINING SCREW TERMINAL WITH THE USE OF A BURNDY KAQU MECHANICAL TERMINAL LUG. WIRES SHALL BE CONNECTED AS SHOWN BELOW. TRACER WIRE AND GROUND WIRE SHALL BOTH BE OF ADEQUATE LENGTH TO EXTEND FIVE (5) FEET ABOVE THE TOP OF ACCESS BOX.
14. TWO WRAPS OF TRACER WIRE SHALL BE WRAPPED SNUGGLY AROUND BASE OF HYDRANT. WIRE SHALL NOT BE LEFT IN A WAY THAT WOULD INTERFERE WITH MOWING AROUND HYDRANT.

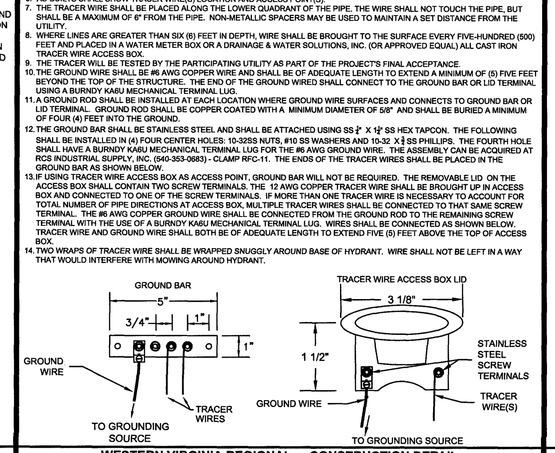

WESTERN VIRGINIA REGIONAL - CONSTRUCTION DETAIL

TRACER WIRE FOR NON-METALLIC PRESSURE PIPE 01/01/14 G-4

1. BEDDING, HAUNCHING AND INITIAL BACKFILL CONSTRUCTION SHALL BE IN ACCORDANCE WITH THIS DETAIL AND MANUFACTURERS RECOMMENDATION.
2. ALL PVC PIPE SHALL BE BEDDED IN COMPACTED VDOT #57 OR #58 STONE, OR CRUSHER RUN.
3. IN AREAS SUBJECTED TO VEHICULAR TRAFFIC, BEDDING STONE AND FILL SHALL BE PLACED IN 6" LIFTS FROM BOTTOM OF TRENCH TO 1' ABOVE THE PIPE AND THE REMAINING SHALL BE PLACED IN 10" LIFTS AND SHALL BE COMPACTED TO AT LEAST 90% OF MAXIMUM DENSITY AS DETERMINED BY ASTM D 698.
4. BEDDING REQUIREMENTS FOR DUCTILE IRON WATER LINE ARE DEPENDENT ON MANUFACTURER'S BEDDING CRITERIA.
5. ALL EXCAVATIONS SHALL COMPLY WITH OSHA TECHNICAL MANUAL, CHAPTER 2, TITLED "EXCAVATIONS: HAZARD RECOGNITION IN TRENCHING AND SHORING."
6. THE TRACER WIRE SHALL BE PLACED ALONG THE LOWER QUADRANT OF THE PIPE. THE WIRE SHALL NOT TOUCH THE PIPE, BUT SHALL BE A MAXIMUM OF 6" FROM THE PIPE. NON-METALLIC SPACERS MAY BE USED TO MAINTAIN A SET DISTANCE FROM THE UTILITY.

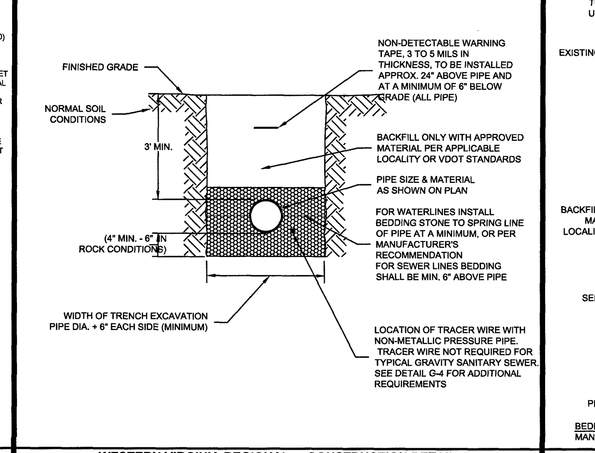

WESTERN VIRGINIA REGIONAL - CONSTRUCTION DETAIL

BEDDING AND BACKFILL OUTSIDE OF PAVED AREAS 01/01/14 G-11

1. BEDDING, HAUNCHING AND INITIAL BACKFILL CONSTRUCTION SHALL BE IN ACCORDANCE WITH THIS DETAIL AND MANUFACTURERS RECOMMENDATION.
2. ALL PVC PIPE SHALL BE BEDDED IN COMPACTED VDOT #57 OR #58 STONE.
3. IN VDOT ROW, THE CONTRACTOR SHALL REPLACE THE PAVEMENT AS REQUIRED AND SPECIFIED BY VDOT. IN ROANOKE CITY, CONTRACTOR SHALL REPLACE PAVEMENT AS REQUIRED BY CITY OF ROANOKE RIGHT OF WAY EXCAVATION AND RESTORATION STANDARDS, LATEST EDITION.
4. ALL CONSTRUCTION WITHIN THE PUBLIC RIGHT-OF-WAY SHALL BE AS SPECIFIED BY VDOT OR APPLICABLE LOCALITY.
5. PRIOR TO CONSTRUCTION, CONTRACTOR IS RESPONSIBLE FOR SECURING ALL REQUIRED PERMITS FROM VDOT AND/OR APPLICABLE LOCALITY.
6. IN AREAS SUBJECTED TO VEHICULAR TRAFFIC, BEDDING STONE AND FILL SHALL BE PLACED IN 6" LIFTS AND SHALL BE COMPACTED TO AT LEAST 95% OF MAXIMUM DENSITY AS DETERMINED BY ASTM D 698.
7. ALL SEWER LINE PIPE SHALL BE BEDDED IN COMPACTED GRANULAR MATERIAL. BEDDING REQUIREMENTS FOR DUCTILE SEWER LINE ARE DEPENDENT ON MANUFACTURER'S BEDDING CRITERIA.
8. BENCH CUT ON EACH SIDE OF PAVEMENT SHALL BE IN ACCORDANCE WITH VDOT OR APPLICABLE LOCALITY'S SPECIFICATIONS.
9. ALL EXCAVATIONS SHALL COMPLY WITH OSHA TECHNICAL MANUAL, CHAPTER 2, TITLED "EXCAVATIONS: HAZARD RECOGNITION IN TRENCHING AND SHORING."
10. THE TRACER WIRE SHALL BE PLACED ALON