GENERAL NOTES:

1. TRAFFIC BEARING BOX REQUIRED IN TRAFFIC AREAS.
2. ALL PIPE AND FITTINGS SHALL BE OF SIMILAR MATERIAL.
3. ALL PIPE SHALL BE OF SAME SIZE.
4. NO BENDS ARE ALLOWED IN THE LATERAL FROM THE MAIN TO THE CLEAN-OUT STACK WYE. (EXCEPT AS NOTED)
5. ALL MAIN LINE TAPS ON ACTIVE MAINS WILL BE PERFORMED BY ROANOKE COUNTY UTILITY DEPT.
6. A DROP CONNECTION TO THE CLEAN OUT STACK WILL BE ACCEPTABLE ONLY WHEN THE FOLLOWING CONDITIONS APPLY (A) THE DEPTH EXCEEDS 8 FEET (B) CLEANOUT STACK AND FITTINGS ARE SCH-40 PIPE.
7. LATERAL MUST BE MIN. 15' FROM PROPERTY CORNER.
8. LATERAL SIZE MINIMUM. 4" FOR RESIDENTIAL SERVICE 6" FOR NON-RESIDENTIAL SERVICE
9. MINIMUM COVER FOR ALL SEWER LATERALS SHALL BE THREE (3')FEET.

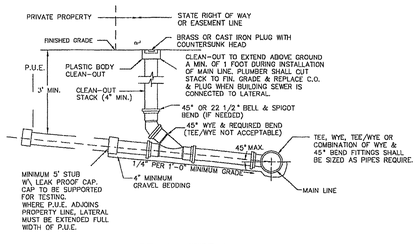

SANITARY SEWER LATERAL

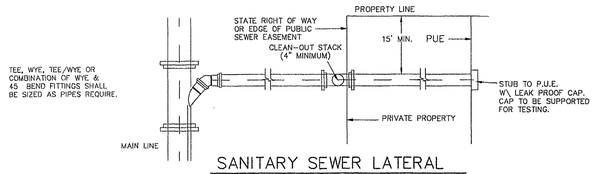

SANITARY SEWER LATERAL

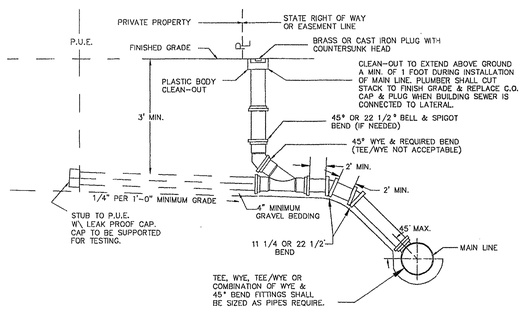

SANITARY SEWER LATERAL IN P.U.E.

REACTION BLOCKING
WATER AND SANITARY SEWER FACILITIES

NOTE:
PAINT ALL EXPOSED STEEL WITH TWO COATS OF A WATERPROOF BITUMASTIC COMPOUND
ALL CONCRETE SHALL BE CLASS A-3

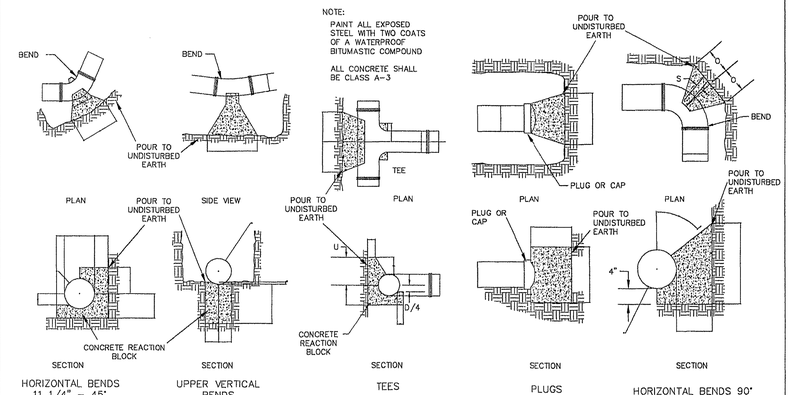

HORIZONTAL BENDS 11 1/4° – 45° | UPPER VERTICAL BENDS | TEES | PLUGS | HORIZONTAL BENDS 90°

DIA.	HORIZONTAL BENDS 11 1/4° A	B	C	22 1/2° A	B	C	45° A	B	C	UPPER VERTICAL BENDS 11 1/4° E	F	G	22 1/2° E	F	G	45° E	F	G	PLUGS L	M	N	HORIZ. BENDS 90° O	P	R	S	TEE BRANCH T	U	V	W
4"	.50	.58	.75	.75	.58	.75	1.25	.58	.75	.50	.58	.58	.75	.58	.58	1.25	.58	.58	.50	1.17	1.50	1.17	1.17	1.67	.42	.75	.67	.75	.50
6"	.50	.58	.75	.75	.58	.75	1.25	.58	.75	.50	.58	.58	.75	.58	.58	1.25	.58	.58	.50	1.17	1.50	1.17	1.17	1.67	.42	.75	.67	.75	.50
8"	.67	.67	.75	1.00	.67	.75	2.00	.67	.75	.67	.67	.58	1.00	.67	.67	2.08	.75	.83	.67	1.50	2.25	1.58	1.50	1.75	.50	.75	.83	1.00	.67
10"	.83	.75	.75	1.50	.75	.83	2.50	.75	.92	.83	.75	.67	1.50	.83	.67	2.08	.75	.83	.67	2.00	2.50	1.67	2.08	1.75	.50	.83	1.00	1.25	.67
12"	1.00	.83	.75	1.75	.92	.92	2.92	.92	1.17	1.00	.83	.67	1.75	.83	.67	2.50	.92	.92	.83	2.33	3.25	2.00	2.50	1.92	.58	1.00	1.25	1.42	.67
16"	1.33	1.00	.75	2.33	1.00	1.17	3.67	1.25	1.42	1.33	1.00	.75	2.25	.83	.75	3.33	1.25	1.25	1.00	2.92	4.17	2.08	3.00	2.17	.83	1.17	1.67	1.83	.83
20"	1.67	1.17	1.00	3.17	1.17	1.33	4.75	1.50	1.83	1.67	1.17	.83	3.00	1.17	1.00	4.17	1.50	1.50	1.33	3.75	5.17	3.50	3.83	2.83	1.00	1.33	2.08	2.25	1.17
24"	2.00	1.33	1.00	4.00	1.33	1.50	6.08	1.67	1.92	2.00	1.33	1.00	3.50	1.33	1.00	5.00	1.75	1.75	1.67	4.33	6.25	4.67	4.00	3.00	1.00	1.50	2.50	2.67	1.33
30"	2.50	1.50	1.08	5.00	1.58	1.75	7.95	2.00	3.08	2.50	1.58	1.08	4.17	1.58	1.08	6.25	2.25	2.25	2.00	5.42	7.42	5.57	5.00	3.83	1.17	1.75	3.08	3.92	1.83
36"	3.00	1.92	1.17	5.75	2.00	2.00	8.92	2.50	3.33	3.00	1.58	1.17	5.33	2.00	1.17	7.50	2.50	2.67	2.00	6.50	9.00	6.83	6.00	4.83	1.17	2.00	3.75	3.92	1.83

WATER METER BOX
CAST IRON FRAME AND COVER

NOTE: ALL CASTINGS SHALL BE COMMERCIALLY MACHINABLE.
THE FOLLOWING PORTIONS OF COVER SEATS AND COVERS SHALL BE MACHINED:
FRAME – HORIZONTAL AND VERTICAL SURFACES OF COVER SEAT.
COVER – UNDER SURFACE WHICH RESTS UPON THE COVER SEAT AND THE VERTICAL SURFACE WHICH FITS INTO THE COVER SEAT.
AFTER MACHINING COVER SHALL SEAT IN ANY POSITION WITHOUT ROCKING AND BE FLUSH WITH TOP OF FRAME. SIDE PLAY OF COVER SHALL NOT BE MORE THAN 1/4".
LETTERS ON COVER SHALL BE 1" HIGH AND 3/16" THICK.

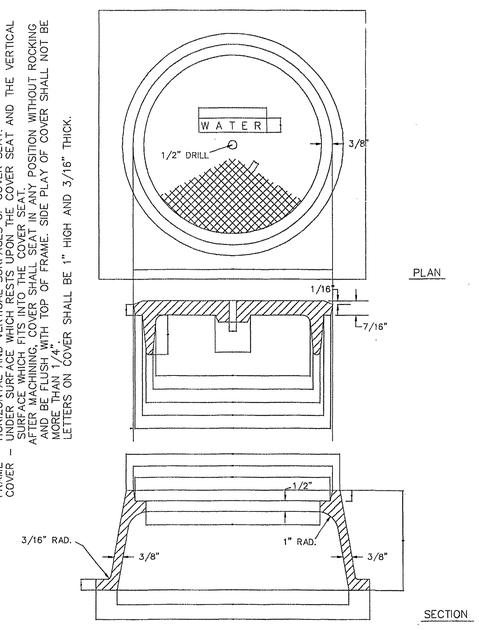

UTILITY BEDDING AND PROTECTION
WATER AND SANITARY SEWER FACILITIES

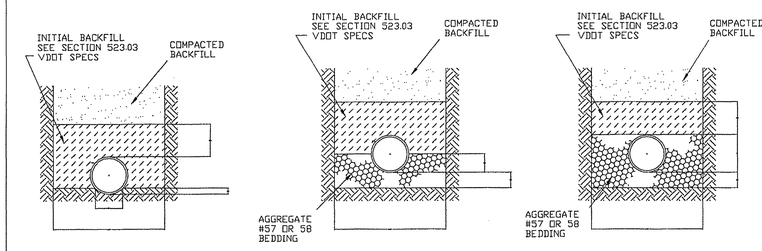

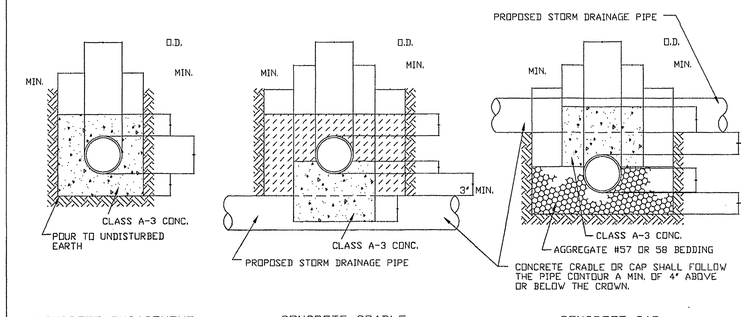

CONCRETE ENCASEMENT | CONCRETE CRADLE | CONCRETE CAP

NOTES:

1. WHERE THE TRENCH BOTTOM IS IN ROCK, IT SHALL BE EXCAVATED TO A MINIMUM OF 8' BELOW THE BOTTOM OF THE PIPE AND BACKFILED WITH BEDDING MATERIAL.
2. WHERE PIPE FOUNDATIONS ARE YIELDING, PIPE SHALL BE BEDDED ON A MINIMUM OF 8' BEDDING MATERIAL.

* FOR PIPE LESS THAN 12' THE TRENCH WIDTH MAY BE 36' MAXIMUM.

STANDARD SETTING FOR 5/8" WATER METER

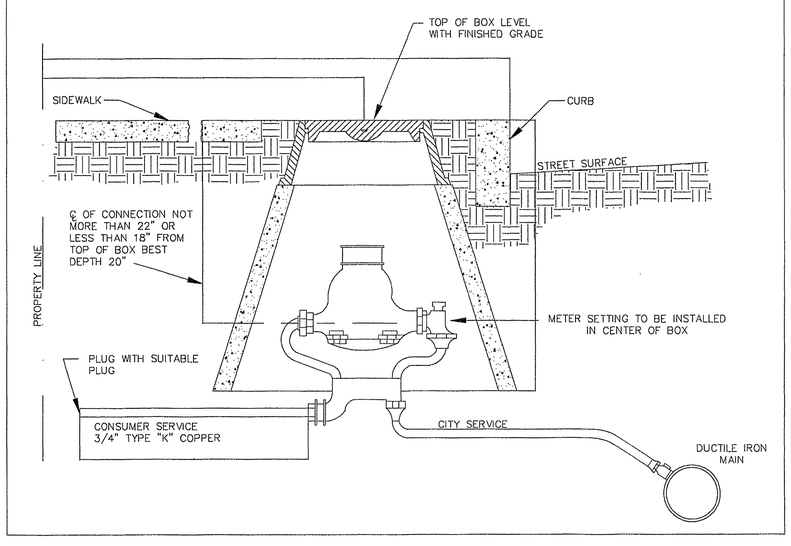

COMMONWEALTH OF VIRGINIA
WM. THOMAS AUSTIN
No. 030907
PROFESSIONAL ENGINEER

Revisions	Date

Issue Date: FEBRUARY 6, 2001
Drawn By: JPR
Designed By: JPR
Checked By: WTA
Date: 02/06/01

Mattern & Craig
CONSULTING ENGINEERS • SURVEYORS
701 FIRST STREET, S.W.
ROANOKE, VIRGINIA 24016
(540) 345-9342
FAX (540) 345-7691

HUBBELL – WYATT COURT – PHASE III

UTILITY DETAILS

CITY OF ROANOKE, VIRGINIA

Vertical Scale: N/A
Horizontal Scale: N/A
Commission Number: 1567-AD
Sheet No.: 6