TRASCO® MC 9133R

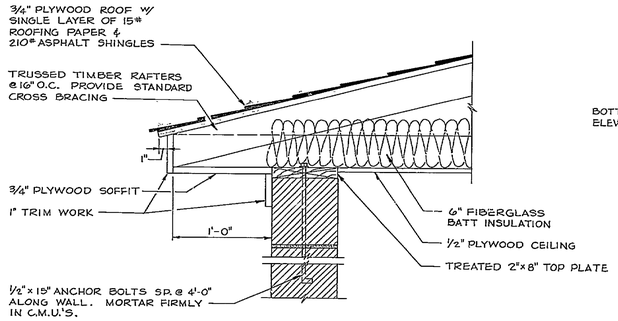

DETAIL 3.2/3
SCALE: 1 1/2" = 1'-0"

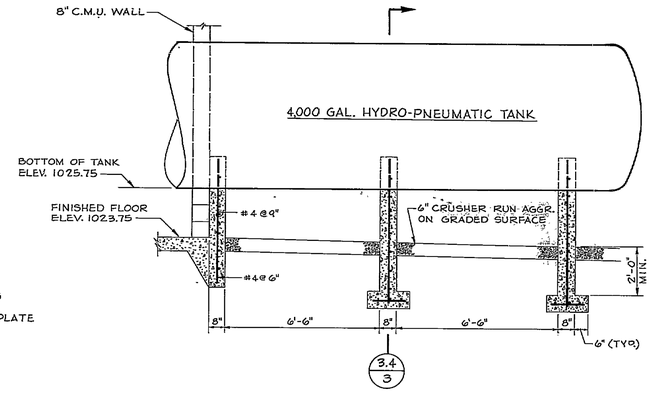

DETAIL 3.3/3
SCALE: 3/8" = 1'-0"

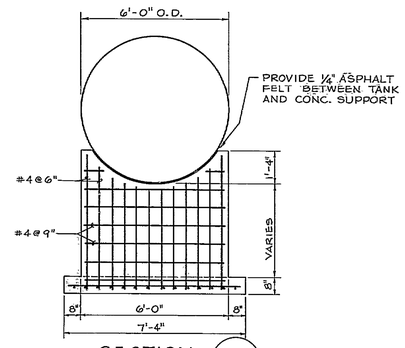

SECTION 3.4/3
SCALE: 3/8" = 1'-0"

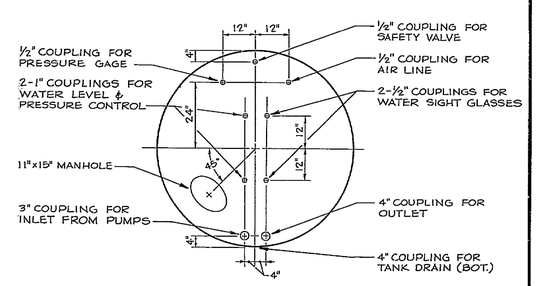

END VIEW OF PRESSURE TANK
NOT TO SCALE

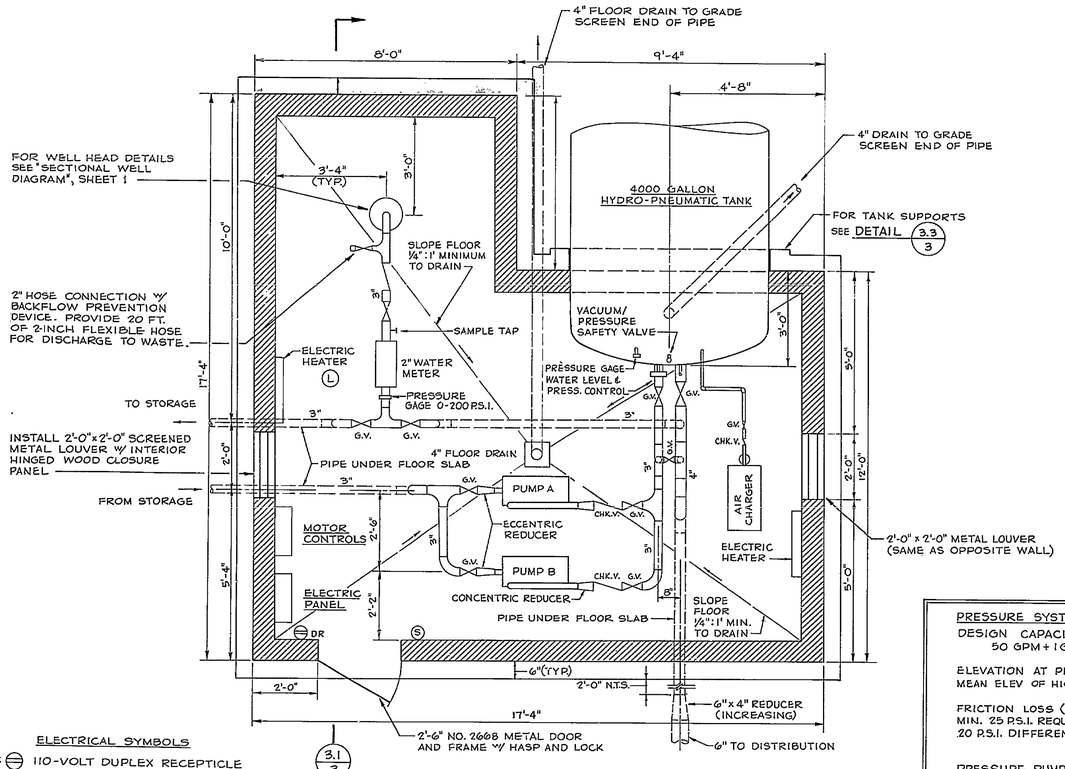

ELECTRICAL SYMBOLS

DR — 110-VOLT DUPLEX RECEPTICLE
L — CEILING MOUNTED INCANDESCENT LIGHT
S — SINGLE POLE LIGHT SWITCH

PLAN
WELL HOUSE AND PUMP STATION
SCALE: 1/2" = 1'-0"

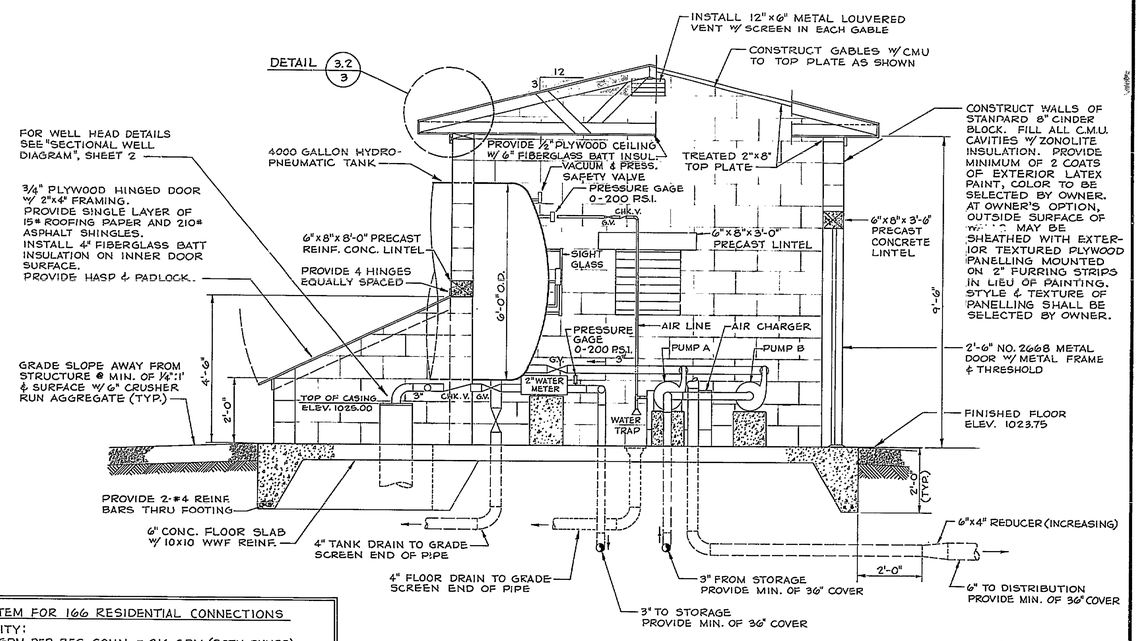

SECTION 3.1/3
SCALE: 1/2" = 1'-0"

PRESSURE SYSTEM FOR 166 RESIDENTIAL CONNECTIONS

DESIGN CAPACITY:
50 GPM + 1GPM PER RES. CONN. = 216 GPM (BOTH PUMPS)
= 108 GPM PER PUMP

ELEVATION AT PRESSURE PUMPS ——— 1025.0
MEAN ELEV OF HIGH LOTS (LOTS 10, 11 & 12, BLK 5, SECT 3) ——— 1165.0
TOTAL STATIC HEAD ——— 140.0 FT.
FRICTION LOSS (DISTRIBUTION & PUMP BLDG. PIPING ——— 32.
MIN. 25 P.S.I. REQUIREMENT (25 x 2.31) ——— 58.
20 P.S.I. DIFFERENTIAL AT PRESSURE TANK ——— 46.
TOTAL DYNAMIC HEAD ——— 276. FT.

PRESSURE PUMP SELECTION (2 REQ'D):
JACUZZI MODEL 15 DL 1 1/2
3450 RPM SINGLE STAGE
15 HP 3 PHASE 60 HZ
IMPELLER NO. 3271 (8 31/32" DIAMETER)
CURVE NO. A-416
120 GPM @ TDH OF 300 FT.

COMMONWEALTH OF VIRGINIA
JOHN T. PARKER
CIVIL ENGINEER
CERTIFICATE NO. 5447
CERTIFIED PROFESSIONAL ENGINEER

REVISIONS		
DATE	REMARKS	BY

DRAWN BY:
C'K'D. BY:
APPROVED:
DATE:
N.B.

T. P. PARKER & SON
engineers & surveyors, ltd.
TELEPHONE (703) 387-1153
P.O. BOX 367, SALEM, VIRGINIA 24153

HUNTRIDGE WATER SYSTEM
ROANOKE COUNTY LAND VENTURE INC
ROANOKE COUNTY, VIRGINIA

CONSTRUCTION DETAILS OF WELL HOUSE & PRESSURE SYSTEM
Scale: as noted
May, 1980

SHEET 16 OF 17

RC-1885