1. SETTER TO BE A.Y. McDONALD #20-215 WDD033 , FORD VBHH72-15W-1133 OR APPROVED EQUAL.
2. SADDLES MUST BE USED WITH ALL PLASTIC & CLASS 50 DUCTILE IRON PIPE. SERVICE SADDLES SHALL BE USED IN ACCORDANCE WITH SECTION 2666 OF THE WATER STANDARDS. SERVICE SADDLES FOR PLASTIC PIPE SHALL BE: POWERSEAL 3417, OR 3412AS, ROMAC 202S, OR 509, OR FORD METER F202 OR FS309. FOR DUCTILE IRON PIPE USE THE ABOVE OR POWERSEAL 3413, ROMAC 202 OR FORD METER F202.
3. METER BOX MUST BE CARSONWID-STATES-STATES PLASTICS, INC. PLASTIC BOX WITH FORD A32-7 (ELECTRONIC READ LID) OR A. Y. McDONALD MODEL 74M52-1TC CAST IRON BASE & COVER OR APPROVED EQUAL. USE OF TRAFFIC BEARING BOX SHALL BE APPROVED BY THE AUTHORITY. TRAFFIC BEARING BOX SHALL BE CARSONWID STATES PLASTICS H20-OR EQUIVALENT AND U.S. ROMAC 202 OR FORD METER BOX C52H OR EQUIVALENT.
4. WHENEVER SIDEWALK EXISTS OR IS PROPOSED, MODIFY METER LOCATION AS DIRECTED
5. CORPORATION STOP MUST BE FORD F1000-4-G OR APPROVED EQUAL

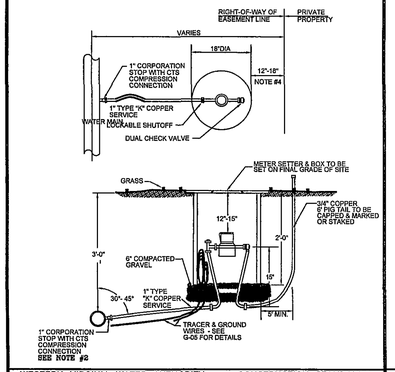

WESTERN VIRGINIA WATER AUTHORITY – CONSTRUCTION STANDARDS

REVISION	DATE	TYPE "A" SINGLE RESIDENTIAL WATER SERVICE (LINE PRESSURE UNDER 80 PSI)	W-01
	07/01/04		
	03/01/06		

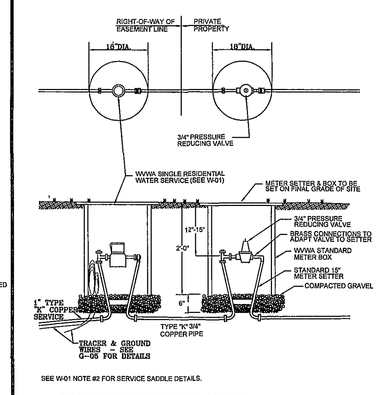

SEE W-01 NOTE #2 FOR SERVICE SADDLE DETAILS.

1 THIS CONFIGURATION REQUIRED WHEN WATER PRESSURE AT THE WATER MAIN IS BETWEEN 80 AND 120 PSI.

WESTERN VIRGINIA WATER AUTHORITY – CONSTRUCTION STANDARDS

REVISION	DATE	TYPE "B" SINGLE RESIDENTIAL WATER SERVICE (LINE PRESSURE UNDER 80 TO 120 PSI)	W-02
	07/01/04		
	03/01/06		

NOTES:
1. ALL MANHOLE FRAMES AND COVERS SHALL BE EAST JORDAN IRON WORKS, INC. WATERTIGHT MANHOLE FRAME MODEL #1045Z, WATERTIGHT COVER MODEL #1040AGS AND BOLT-DOWN MANHOLE COVERS MODEL #1040ACLGS, OR APPROVED EQUAL. BOLT-DOWN MODEL TO BE USED IN AREAS SUBJECTED TO FLOODING OR AS DIRECTED BY THE AUTHORITY.
2. STEPS TO BE VERTICALLY ALIGNED.
3. THE FRAME AND COVER SHALL BE PROPERLY ALIGNED WITH THE 2 FOOT OPENING OF THE MANHOLE STRUCTURE AND BOLTED IN PLACE.
4. TOP INVERT LINE SHALL NOT ENTER THROUGH RISER (CONE) SECTION OR JOINT.
5. GROUT ANNULAR SPACE BETWEEN PIPE AND PRECAST MANHOLE ON INSIDE OF MANHOLE.

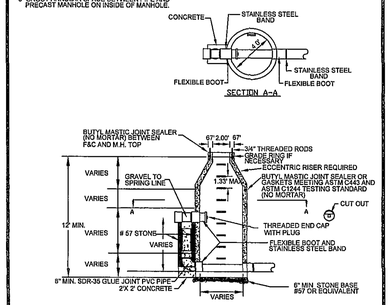

WESTERN VIRGINIA WATER AUTHORITY – CONSTRUCTION STANDARDS

REVISION	DATE	DETAIL FOR MH 1 OUTSIDE DROP MANHOLE (FOR USE WITH PVC PIPE)	S-03
	07/01/04		
	03/01/06		

NOTES.
1. ALL MANHOLE FRAMES AND COVERS SHALL BE EAST JORDAN IRON WORKS, INC. WATERTIGHT MANHOLE FRAME MODEL #1045Z, WATERTIGHT COVER MODEL #1040AGS AND BOLT-DOWN MANHOLE COVER MODEL #1040ACLGS, OR APPROVED EQUAL. BOLT-DOWN MODEL TO BE USED IN AREAS SUBJECTED TO FLOODING OR AS DIRECTED BY THE AUTHORITY.
2. STEPS TO BE VERTICALLY ALIGNED.
3. THE FRAME AND COVER SHALL BE PROPERLY ALIGNED WITH THE 2 FOOT OPENING OF THE MANHOLE STRUCTURE AND BOLTED IN PLACE
4. FLAT TOP MANHOLES MAY ONLY BE SUBSTITUTED WITH THE PERMISSION OF THE UTILITY DIRECTOR. WHEN USED, THE ECCENTRIC OPENING MUST LINE UP WITH THE STEPS.
5. SAMPLING MANHOLES IN TRAFFIC AREAS SHALL BE CONSTRUCTED AS PER MANHOLE DETAILS
6. FLEXIBLE JOINT MANHOLE CONNECTION SHALL BE AS MANUFACTURED BY PRES-SEAL GASKET CORPORATION OR EQUAL.
7. GROUT ANNULAR SPACE BETWEEN PIPE AND PRECAST MANHOLE ON INSIDE OF MANHOLE.

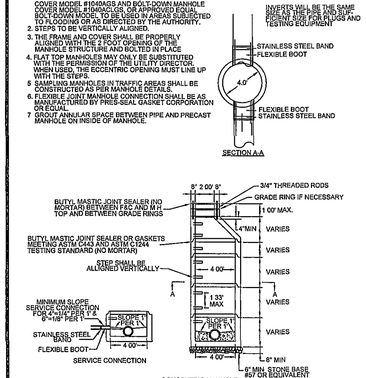

WESTERN VIRGINIA WATER AUTHORITY – CONSTRUCTION STANDARDS

REVISION	DATE	4' STANDARD MANHOLE FOR PIPE 15" OR SMALLER	S-01
	07/01/04		
	03/01/06		

NOTES
1. ALL MANHOLE FRAMES AND COVERS SHALL BE EAST JORDAN IRON WORKS, INC. WATERTIGHT MANHOLE FRAME MODEL #1045Z, WATERTIGHT COVER MODEL #1040AGS AND BOLT-DOWN MANHOLE COVER MODEL #1040ACLGS, OR APPROVED EQUAL. BOLT-DOWN MODEL TO BE USED IN AREAS SUBJECTED TO FLOODING OR AS DIRECTED BY THE AUTHORITY.
2. STEPS TO BE VERTICALLY ALIGNED.
3. THE ENTIRE MANHOLE STRUCTURE INCLUDING FRAME AND COVER SHALL BE INSTALLED BEFORE CUTTING THE TOP OF THE SEWER PIPE IN THE MANHOLE. AUTHORITY INSPECTOR TO BE PRESENT DURING INSTALLATION
4. THE FRAME AND COVER SHALL BE PROPERLY ALIGNED WITH THE 2 FOOT OPENING OF THE MANHOLE STRUCTURE AND BOLTED IN PLACE
5. RISER AND OTHER SECTIONS SHALL NOT BE INSTALLED FOR A MINIMUM OF 24 HOURS AFTER POURING OF BASE,BENCH, & INVERT
6. GROUT ANNULAR SPACE BETWEEN PIPE AND PRECAST MANHOLE ON INSIDE OF MANHOLE.

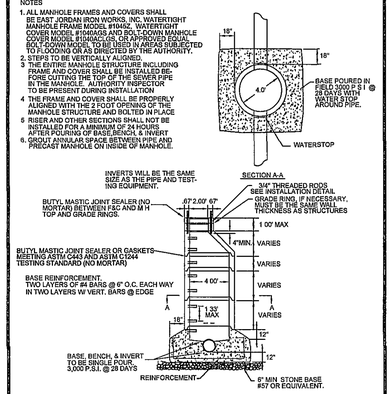

WESTERN VIRGINIA WATER AUTHORITY – CONSTRUCTION STANDARDS

REVISION	DATE	DETAIL FOR MH 1 STRADDLE MANHOLE FOR PIPE 15" OR SMALLER	S-02
	07/01/04		
	03/01/06		

NOTES:
1. BEDDING, HAUNCHING AND INITIAL BACKFILL CONSTRUCTION SHALL BE IN ACCORDANCE WITH MANUFACTURER'S RECOMMENDATION.
2. ALL PVC PIPE SHALL BE BEDDED IN COMPACTED VDOT #57 OR #68 STONE.
3. IN AREAS NOT SUBJECTED TO VEHICULAR TRAFFIC, BEDDING STONE AND FILL SHALL BE PLACED IN 6" LIFTS FROM BOTTOM OF TRENCH TO 1' ABOVE THE PIPE AND THE REMAINING SHALL BE PLACED IN 10" LIFTS AND SHALL BE COMPACTED TO AT LEAST 90% OF MAXIMUM DENSITY AS DETERMINED BY ASTM D 698
4. BEDDING REQUIREMENTS FOR DUCTILE IRON WATER LINE ARE DEPENDENT ON MANUFACTURER'S BEDDING CRITERIA.
5. ALL EXCAVATIONS SHALL COMPLY WITH OSHA TECHNICAL MANUAL, CHAPTER 2, TITLED "EXCAVATIONS HAZARD RECOGNITION IN TRENCHING AND SHORING "

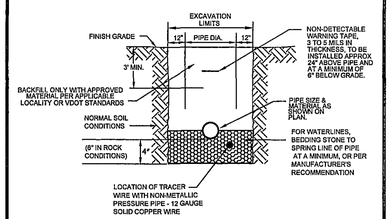

WESTERN VIRGINIA WATER AUTHORITY – CONSTRUCTION STANDARDS

REVISION	DATE	BEDDING AND BACKFILL OUTSIDE OF PAVED AREAS	W-24
	07/01/04		
	03/01/06		

NOTES:
1. BEDDING, HAUNCHING AND INITIAL BACKFILL CONSTRUCTION SHALL BE IN ACCORDANCE WITH MANUFACTURER'S RECOMMENDATION
2. ALL PVC PIPE SHALL BE BEDDED IN COMPACTED VDOT #57 OR #68 STONE.
3. IN AREAS NOT SUBJECTED TO VEHICULAR TRAFFIC, BEDDING STONE AND FILL SHALL BE PLACED IN 6" LIFTS FROM BOTTOM OF TRENCH TO 1' ABOVE THE PIPE AND THE REMAINING SHALL BE PLACED IN 10" LIFTS AND SHALL BE COMPACTED TO AT LEAST 90% OF MAXIMUM DENSITY AS DETERMINED BY ASTM D 698.
4. ALL SEWER LINE PIPE SHALL BE BEDDED IN COMPACTED GRANULAR MATERIAL. BEDDING REQUIREMENTS FOR DUCTILE SEWER LINE ARE DEPENDENT ON MANUFACTURER'S BEDDING CRITERIA
5. ALL EXCAVATIONS SHALL COMPLY WITH OSHA TECHNICAL MANUAL, CHAPTER 2, TITLED "EXCAVATIONS: HAZARD RECOGNITION IN TRENCHING AND SHORING."

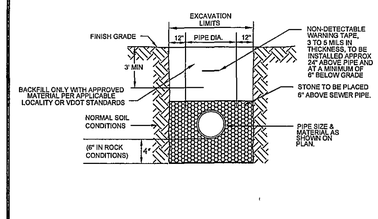

WESTERN VIRGINIA WATER AUTHORITY – CONSTRUCTION STANDARDS

REVISION	DATE	BEDDING AND BACKFILL OUTSIDE OF PAVED AREAS	S-30
	07/01/04		
	03/01/06		

GENERAL NOTES:
1. TRAFFIC BEARING BOX REQUIRED IN TRAFFIC AREAS
2. ALL PIPE AND FITTINGS SHALL BE OF SIMILAR MATERIAL.
3. ALL PIPE SHALL BE OF SAME SIZE.
4. NO BENDS ARE ALLOWED IN THE LATERAL FROM THE MAIN TO THE CLEANOUT STACK WYE. (EXCEPT AS NOTED)
5. ALL MAIN LINE TAPS ON ACTIVE MAINS WILL BE PERFORMED BY WESTERN VIRGINIA WATER AUTHORITY.
6. PIPING BEHIND CLEANOUT TO BE INSTALLED PER BOCA CODE
7. MINIMUM LATERAL SIZE:
   4" FOR RESIDENTIAL SERVICE
   6" FOR NON-RESIDENTIAL SERVICE
8. MINIMUM COVER FOR ALL SEWER LATERALS SHALL BE THREE(3') FEET.
9. PROPERTY OWNER RESPONSIBLE FOR INSTALLING CLEANOUT ON PROPERTY LINE WHEN MAINTENANCE OCCURS, IN ACCORDANCE WITH THIS STANDARD
10. FLOWLINE AT CLEANOUT WYE SHALL BE A MINIMUM OF THREE FEET (3') BELOW LOWEST SERVED FINISHED FLOOR.

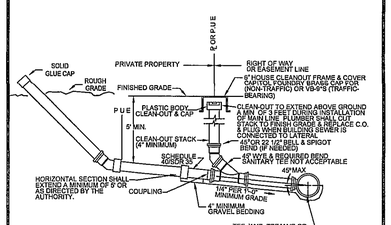

WESTERN VIRGINIA WATER AUTHORITY – CONSTRUCTION STANDARDS

REVISION	DATE	SANITARY SEWER LATERAL	S-08
	07/01/04		
	03/01/06		

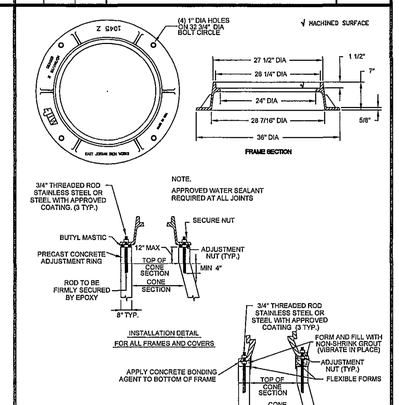

WESTERN VIRGINIA WATER AUTHORITY – CONSTRUCTION STANDARDS

REVISION	DATE	INSTALLATION DETAIL FOR ALL FRAMES AND COVERS	W-16
	07/01/04		

WESTERN VIRGINIA WATER AUTHORITY – CONSTRUCTION STANDARDS

REVISION	DATE	WATERTIGHT MANHOLE FRAME	S-05
	07/01/04		

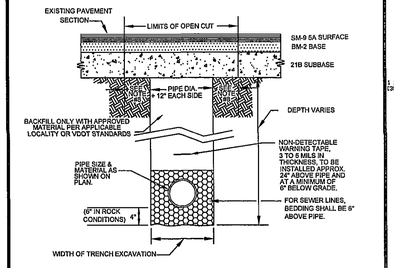

NOTES:
1. BEDDING, HAUNCHING AND INITIAL BACKFILL CONSTRUCTION SHALL BE IN ACCORDANCE WITH MANUFACTURER'S RECOMMENDATION
2. ALL PVC PIPE SHALL BE BEDDED IN COMPACTED VDOT #57 OR #68 STONE
3. IN ROANOKE COUNTY, THE CONTRACTOR SHALL REPLACE THE OPEN CUT WITH A MINIMUM TOP COURSE OF 1.5" (MINIMUM) VDOT SM-9 SA, BASE COURSE OF 6" VDOT BM-25d, AND SUBBASE OF 10" VDOT 21B, OR AS REQUIRED BY VDOT. IN ROANOKE CITY, CONTRACTOR SHALL REPLACE PAVEMENT AS REQUIRED BY CITY OF ROANOKE RIGHT OF WAY EXCAVATION AND RESTORATION STANDARDS.
4. ALL CONSTRUCTION WITHIN THE PUBLIC RIGHT-OF-WAY SHALL BE AS SPECIFIED BY VDOT OR APPLICABLE LOCALITY.
5. PRIOR TO CONSTRUCTION, CONTRACTOR IS RESPONSIBLE FOR SECURING ALL REQUIRED PERMITS FROM VDOT AND/OR APPLICABLE LOCALITY.
6. IN AREAS SUBJECTED TO VEHICULAR TRAFFIC, BEDDING STONE AND FILL SHALL BE PLACED IN 6" LIFTS AND SHALL BE COMPACTED TO AT LEAST 95% OF MAXIMUM DENSITY AS DETERMINED BY ASTM D 698.
7. ALL SEWER LINE PIPE SHALL BE BEDDED IN COMPACTED GRANULAR MATERIAL. BEDDING REQUIREMENTS FOR DUCTILE SEWER LINE ARE DEPENDENT ON MANUFACTURER'S BEDDING CRITERIA.
8. BENCHCUT ON EACH SIDE OF PAVEMENT: CITY OF ROANOKE EQUALS 12", VDOT RIGHT-OF-WAY EQUALS 6"
9. ALL EXCAVATIONS SHALL COMPLY WITH OSHA TECHNICAL MANUAL, CHAPTER 2, TITLED "EXCAVATIONS: HAZARD RECOGNITION IN TRENCHING AND SHORING "

WESTERN VIRGINIA WATER AUTHORITY – CONSTRUCTION STANDARDS

REVISION	DATE	BEDDING AND BACKFILL UNDER PAVEMENT AND RIGHT-OF-WAY	S-31
	07/01/04		
	03/01/06		

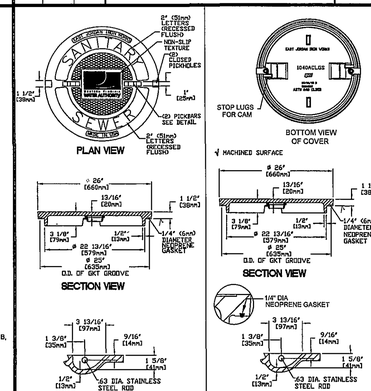

STANDARD MANHOLE COVER MODEL #1040AGS BY EAST JORDAN IRON WORKS, INC OR EQUIVALENT.

STANDARD MANHOLE COVER

1 BOLT-DOWN MANHOLE COVER MODEL #1040ACLGS BY EAST JORDAN IRON WORKS, INC OR EQUIVALENT.
2. BOLT-DOWN MANHOLE COVERS TO BE USED IN AREAS SUBJECT TO FLOODING, SUCH AS ALONG STREAM OR CREEK BANKS, OR AS DIRECTED BY THE AUTHORITY.

BOLT-DOWN MANHOLE COVER

WESTERN VIRGINIA WATER AUTHORITY – CONSTRUCTION STANDARDS

REVISION	DATE	WATERTIGHT MANHOLE COVER	S-06
	07/01/04		
	03/01/06		

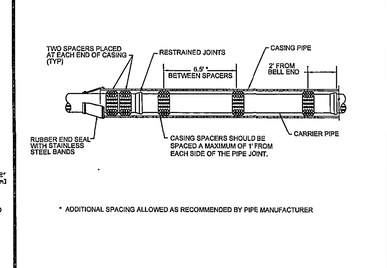

* ADDITIONAL SPACING ALLOWED AS RECOMMENDED BY PIPE MANUFACTURER

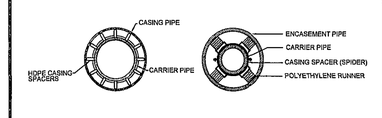

NOTES-
1. A 1" DRAIN WILL BE REQUIRED ON THE LOWER END OF THE CASING IF THE CASING ENDS ARE SEALED WITH MORTAR AND BRICK
2. SPACERS SHALL BE RACI HDPE, SPIDER OR EQUIVALENT.
3. SPACERS SHALL BE SPACED 8 1/2' ON SEWER PIPE
4. CARRIER PIPE SHALL BE DUCTILE OR HDPE IN ACCORDANCE WITH THE AUTHORITY STANDARDS

WESTERN VIRGINIA WATER AUTHORITY – CONSTRUCTION STANDARDS

REVISION	DATE	PIPE SUPPORT IN CASING PIPE	S-18
	07/01/04		
	03/01/06		

LUMSDEN ASSOCIATES, P.C.
ENGINEERS-SURVEYORS-PLANNERS
ROANOKE, VIRGINIA

4664 BRAMBLETON AVENUE
P.O. BOX 20669
ROANOKE, VIRGINIA 24018

PHONE: (540) 774-4411
FAX: (540) 772-9445
E-MAIL: MAIL@LUMSDENPC.COM

COMMONWEALTH OF VIRGINIA
VINCENT K. LUMSDEN
Lic. No. 14288
LAND SURVEYOR B

WATER AND SANITARY SEWER DETAILS

APPROVED

DEVELOPMENT PLAN
FOR
J. B. SMITH, LLC
SITUATED ALONG PENN FOREST BLVD.
CAVE SPRING MAGISTERIAL DISTRICT
ROANOKE COUNTY, VIRGINIA

REVISIONS		
NO.	DATE	DESCRIPTION
1		
2		
3		
4		
5		

DATE: January 2, 2008
SCALE: AS SHOWN
COMMISSION NO: 07-163
SHEET 6 OF 6

07163comp1-06-nd02.plt
w:\drawings\2007\07163\eng\07163comp1.dwg