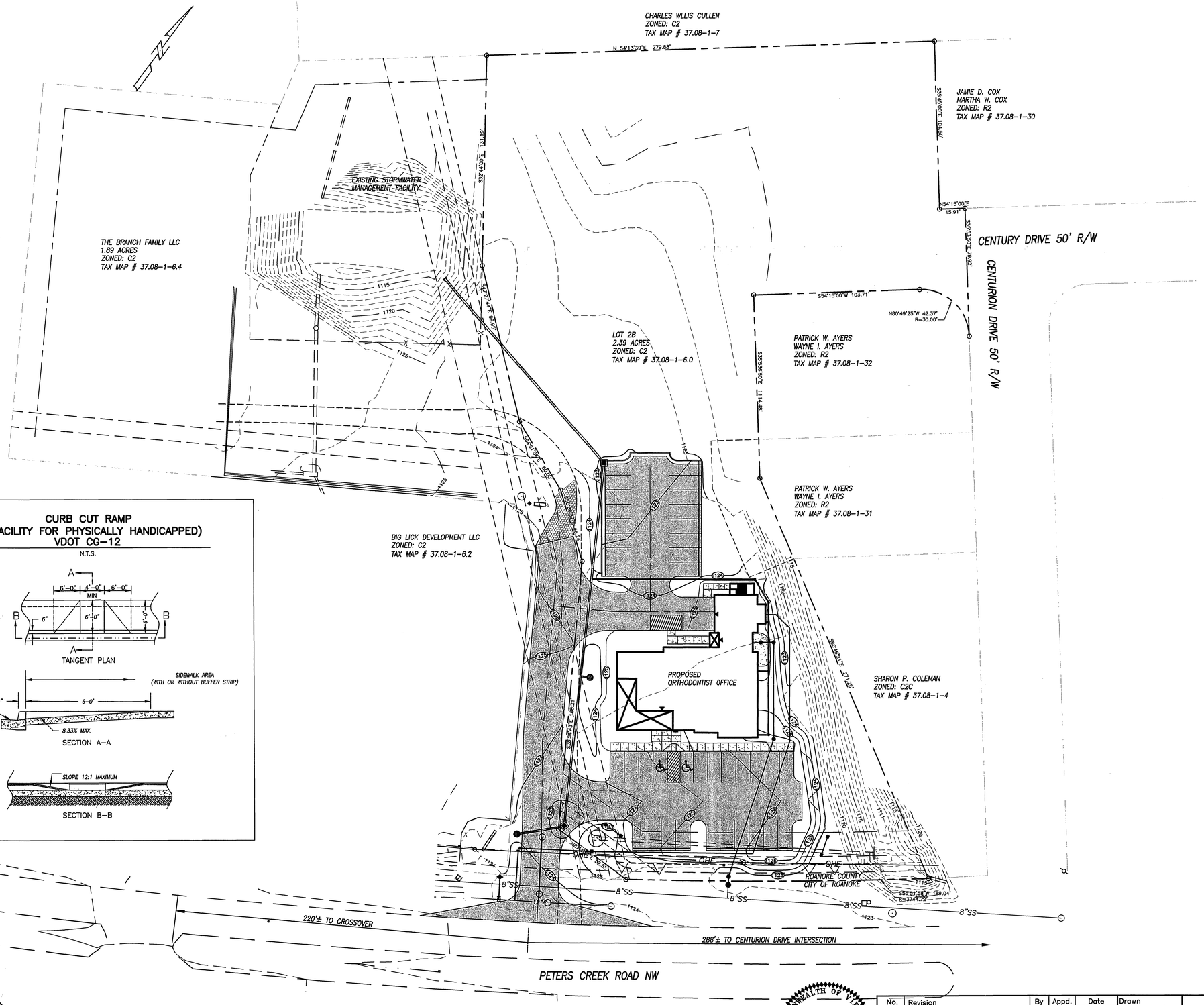

CURB CUT RAMP (FACILITY FOR PHYSICALLY HANDICAPPED) VDOT CG-12

N.T.S.

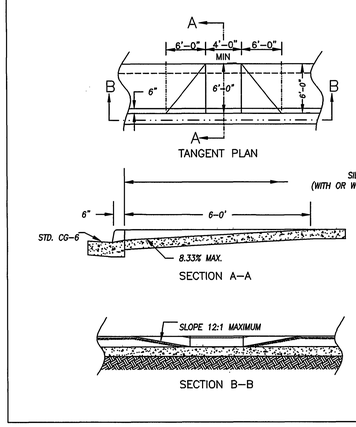

GENERAL NOTES:

1. TRAFFIC BEARING BOX REQUIRED IN TRAFFIC AREAS.
2. ALL PIPE AND FITTINGS SHALL BE OF SIMILAR MATERIAL.
3. ALL PIPE SHALL BE OF SAME SIZE.
4. NO BENDS ARE ALLOWED IN THE LATERAL FROM THE MAIN TO THE CLEANOUT STACK WYE. (EXCEPT AS NOTED)
5. ALL MAIN LINE TAPS ON ACTIVE MAINS WILL BE PERFORMED BY WESTERN VIRGINIA WATER AUTHORITY.
6. PIPING BEHIND CLEANOUT TO BE INSTALLED PER BOCA CODE.
7. MINIMUM LATERAL SIZE:
   4" FOR RESIDENTIAL SERVICE
   6" FOR NON-RESIDENTIAL SERVICE
8. MINIMUM COVER FOR ALL SEWER LATERALS SHALL BE THREE(3') FEET.
9. PROPERTY OWNER RESPONSIBLE FOR INSTALLING CLEANOUT ON PROPERTY LINE WHEN MAINTENANCE OCCURS.

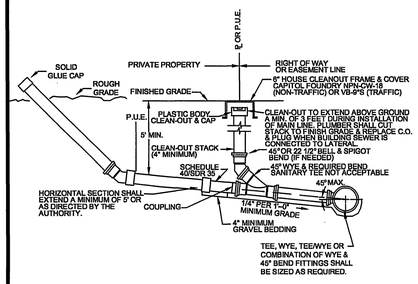

WESTERN VIRGINIA WATER AUTHORITY – CONSTRUCTION STANDARDS		
REVISION DATE 07/01/04	SANITARY SEWER LATERAL	S-08

NOTES:

1. BEDDING, HAUNCHING AND INITIAL BACKFILL CONSTRUCTION SHALL BE IN ACCORDANCE WITH MANUFACTURER'S RECOMMENDATION.
2. WHEN INSTALLING NON-METALLIC PIPE, NON-DETECTABLE WARNING TAPE SHALL BE BURIED AT A MINIMUM 6" BELOW GRADE AND APPROXIMATELY 12" TO 18" ABOVE NON-METALLIC PIPE. IT SHALL BE 3 TO 5 MILS IN THICKNESS AND INSTALLED CONTINUOUS FROM VALVE BOX TO VALVE BOX OR MANHOLE TO MANHOLE.
3. ALL PVC PIPE SHALL BE BEDDED IN COMPACTED GRANULAR MATERIAL WHICH SHALL BE CRUSHED STONE MEETING VDOT STANDARDS FOR GRADUATION 57 OR 68 STONE.
4. IN AREAS NOT SUBJECTED TO VEHICULAR TRAFFIC, BEDDING STONE AND FILL SHALL BE PLACED IN 10" LIFTS AND SHALL BE COMPACTED TO AT LEAST 90% OF MAXIMUM DENSITY AS DETERMINED BY ASTM D 698.
5. ALL SEWER LINE PIPE SHALL BE BEDDED IN COMPACTED GRANULAR MATERIAL. BEDDING REQUIREMENTS FOR DUCTILE WATER LINE ARE DEPENDENT ON MANUFACTURER'S BEDDING CRITERIA.

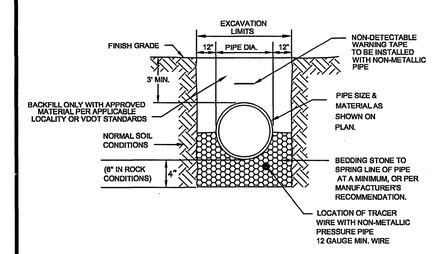

WESTERN VIRGINIA WATER AUTHORITY – CONSTRUCTION STANDARDS		
REVISION DATE 07/01/04	BEDDING AND BACKFILL OUTSIDE OF PAVED AREAS	G-01

WVWA ID# 6PHP4D

ENGINEERING CONCEPTS, INC.
3433 BRAMBLETON AVENUE, SUITE 200B
ROANOKE, VIRGINIA 24018
540.776.5715 FAX: 540.776.8543

COMMONWEALTH OF VIRGINIA
JACK DURRELL ELLINWOOD
No. 001107
LANDSCAPE ARCHITECT
9/26/05

No.	Revision	By	Appd.	Date
1	REV. PER COMMENTS OF 7/25/06	DRB	JDE	8/23/05
2	CO. 9-7-05, CITY 9-1-05 COM.	DRB	JDE	9/26/05

Drawn DRB
Designed DRB
Checked JDE
Approved JDE

ORTHODONTIST OFFICE FOR PAUL C. KAISER LTD.

OVERALL PLAN
ROANOKE COUNTY, VIRGINIA

SCALE: 1"=30'
JULY 7, 2005
PROJECT: 05050

3