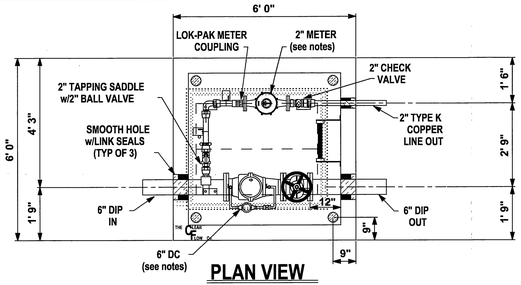

PLAN VIEW

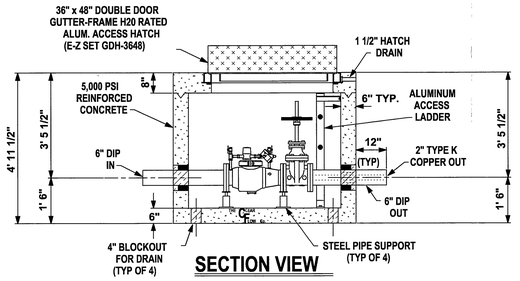

SECTION VIEW

NOTES:
1. CLEAR FLOW VAULT SHIPPED ASSEMBLED WEIGHING APPROXIMATELY 16,000 LBS.
2. 6" WILKINS 310DAL SINGLE CHECK DETECTOR ASSEMBLY w/ONE OS&Y GATE VALVE
3. 2" DOMESTIC LINE IS TYPE K COPPER WITH GRIP JOINT FITTINGS, BALL VALVE AT TAPPING SADDLE (w/LOCKING TABS) & CHECK VALVE ON OUTLET
4. METERS SUPPLIED BY WVWA TO CLEAR FLOW & INSTALLED ON OUR YARD.

DESIGN		12/08/08
DRAWN	STEVEN L. GORDON	
REVISIONS		DATE
DBL. DOOR HATCH; 12" SHORTER		11/15/07
BYPASS SIDE		12/08/08
SINGLE CHECK; 2 DOMESTIC LINES		1/05/11
TAP DOMESTIC OFF FIRE LINE		1/25/11

* PRINTOUT NOT TO ANY SCALE *

CLEAR FLOW BY AMERICAST
210 STONE SPRING ROAD
HARRISONBURG, VA 22801
(540) 434 - 2130

REF. NO. WVWA DC6-2

ROANOKE COUNTY, VIRGINIA
WESTERN VA WATER AUTHORITY
6" DC VAULT w/ 2" DOMESTIC METER

1 | C1.2 | C5.1

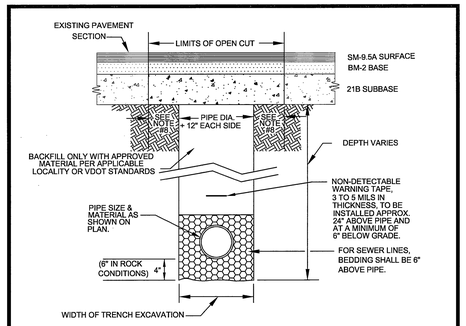

NOTES:

1. BEDDING, HAUNCHING AND INITIAL BACKFILL CONSTRUCTION SHALL BE IN ACCORDANCE WITH MANUFACTURER'S RECOMMENDATION.
2. ALL PVC PIPE SHALL BE BEDDED IN COMPACTED VDOT #57 OR #68 STONE.
3. IN ROANOKE COUNTY, THE CONTRACTOR SHALL REPLACE THE OPEN CUT WITH A MINIMUM TOP COURSE OF 1.5" (MINIMUM) VDOT SM-9.5A, BASE COURSE OF 6" VDOT BM-25d, AND SUBBASE OF 10" VDOT 21B, OR AS REQUIRED BY VDOT. IN ROANOKE CITY, CONTRACTOR SHALL REPLACE PAVEMENT AS REQUIRED BY CITY OF ROANOKE RIGHT OF WAY EXCAVATION AND RESTORATION STANDARDS.
4. ALL CONSTRUCTION WITHIN THE PUBLIC RIGHT-OF-WAY SHALL BE AS SPECIFIED BY VDOT OR APPLICABLE LOCALITY.
5. PRIOR TO CONSTRUCTION, CONTRACTOR IS RESPONSIBLE FOR SECURING ALL REQUIRED PERMITS FROM VDOT AND/OR APPLICABLE LOCALITY.
6. IN AREAS SUBJECTED TO VEHICULAR TRAFFIC, BEDDING STONE AND FILL SHALL BE PLACED IN 6" LIFTS AND SHALL BE COMPACTED TO AT LEAST 95% OF MAXIMUM DENSITY AS DETERMINED BY ASTM D 698.
7. ALL SEWER LINE PIPE SHALL BE BEDDED IN COMPACTED GRANULAR MATERIAL. BEDDING REQUIREMENTS FOR DUCTILE SEWER LINE ARE DEPENDENT ON MANUFACTUER'S BEDDING CRITERIA.
8. BENCHCUT ON EACH SIDE OF PAVEMENT: CITY OF ROANOKE EQUALS 12"; VDOT RIGHT-OF-WAY EQUALS 6".
9. ALL EXCAVATIONS SHALL COMPLY WITH OSHA TECHNICAL MANUAL, CHAPTER 2, TITLED "EXCAVATIONS: HAZARD RECOGNITION IN TRENCHING AND SHORING."

WESTERN VIRGINIA WATER AUTHORITY - CONSTRUCTION STANDARDS		
REVISION DATE	BEDDING AND BACKFILL UNDER PAVEMENT AND RIGHT-OF-WAY	S-31
07/01/04		
03/01/06		

2 | C1.2 | C5.1

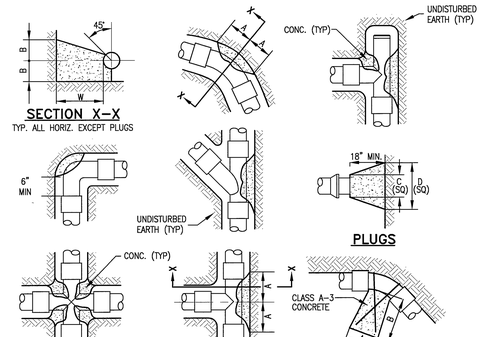

SIZE	1/4 BENDS			1/8 BENDS			1/16 BENDS			TEES			PLUGS		VERTICAL		
	A	B	W	A	B	W	A	B	W	A	B	W	C	D	A	B	W
≤6"	20"	12"	18"	11"	12"	18"	7"	10"	18"	12"	15"	18"	10"	27"	12"	30"	18"
8"	27"	16"	18"	15"	16"	18"	10"	12"	18"	16"	19"	18"	12"	35"	16"	30"	18"
10"	30"	22"	18"	18"	21"	18"	12"	16"	18"	20"	24"	18"	14"	44"	18"	30"	18"
12"	35"	28"	24"	20"	26"	24"	14"	19"	24"	23"	30"	24"	16"	52"	18"	30"	24"
14"	43"	31"	24"	24"	30"	24"	16"	24"	24"	28"	33"	24"	18"	61"	24"	36"	24"
16"	48"	36"	24"	27"	35"	24"	17"	28"	24"	32"	38"	24"	20"	70"	24"	36"	24"

NOTES:
1. CONCRETE SHALL BE VDOT STD CLASS A3 3000 PSI, AIR ENTRAINED.
2. CONCRETE SHALL NOT ENGAGE M.J. PIPE FASTENINGS OR GLANDS AT JOINTS.
3. CONCRETE SHALL NOT BE PLACED ON JOINTS, LIMITING FLEXIBILITY.
4. THRUST BLOCKS FOR VERT. BENDS SHALL BE THE SAME AS FOR HOR. BENDS, EXCEPT SYMETRICAL BENEATH PIPE.
5. EDGES OF THRUST BLOCKS SHALL BE AT PLUS AND MINUS 55 DEGREES TO PIPE CENTERLINE IN THE VERTICAL.
6. FOR VERTICAL BEND FITTINGS ≤12" USE 2–#6 RODS, 14"–24" FITTINGS USE 2–#8 RODS. RODS SHALL BE GALV. AND EMBEDDED IN CONC.

3 | C1.2 | C5.1 THRUST BLOCK DETAIL
NO SCALE

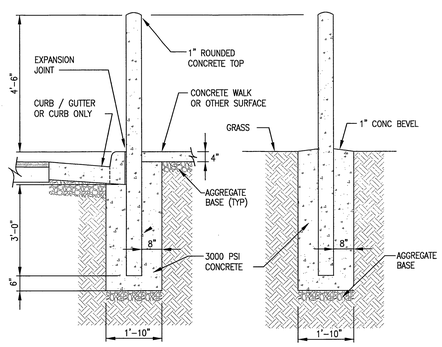

CURB AND GUTTER — GRASS

4 | C1.2 | C5.1 TRAFFIC BOLLARD DETAIL (6" DIA)
SCALE: 1/2"=1'-0"

NOTE:
6" DIAMETER SCH 40 STEEL PIPE BOLLARD FILLED WITH 3000 PSI CONCRETE. PAINT WITH RUST PROHIBITIVE PRIMER AND ENAMEL PAINT CONCRETE @ TOP, DON'T PAINT @ BASE

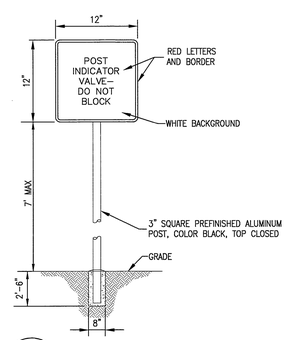

5 | C1.2 | C5.1 PIV SIGN
NO SCALE

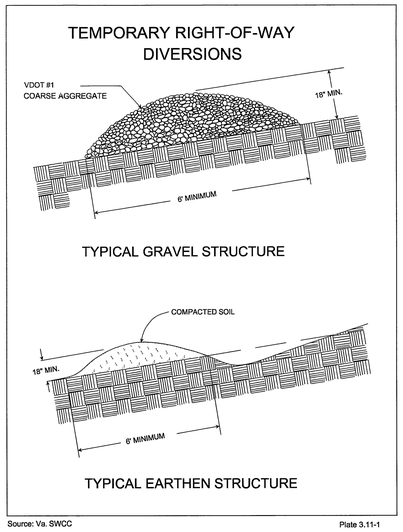

6 | C1.2 | C5.1 TEMPORARY RIGHT–OF–WAY DIVERSION
NO SCALE

REVISION LOG:
1. 5/25/11 REVISIONS PER CITY COMMENTS.
2. 6/22/11 REVISED WATER VAULT PER WVWA COMMENTS.

APPROVED
JUL 07 2011

SPECTRUM DESIGN
10 CHURCH AVE PLAZA SUITE 1
ROANOKE, VIRGINIA 24011
540.342.6001
ROANOKE
Spectrum Design Project Number 10158

DATE 17 JANUARY, 2011

bam

BAM Architects LLC | 3310 West City Street | Richmond VA 23220 | tel 804.355.6016 | fax 804.355.6019 | www.bam-architects.com

PROJECT NAME:
Lofts at West Station
357-365 Salem Avenue
Roanoke, Virginia

PROJECT NO: 1021

ISSUE:	DATE:
CONSTRUCTION SET	02-16-11

APPROVED BY:

ARCHITECT'S SEAL:

COMMONWEALTH OF VIRGINIA
MICHAEL A. RAKES
Lic. No. 28199
1/17/11
PROFESSIONAL ENGINEER

DRAWING TITLE:
CIVIL - DETAILS

DRAWING NO.: C5.1