1. PIER REQUIRED WHEN STORM DRAIN OR OTHER PIPES CROSSES OVER THE OTHER UTILITY WITH A VERTICAL CLEARANCE OF LESS THAN 18".
2. PIER TO BE BUILT ON UNDISTURBED EARTH.
3. CONCRETE TO BE READY MIX, CLASS A3.

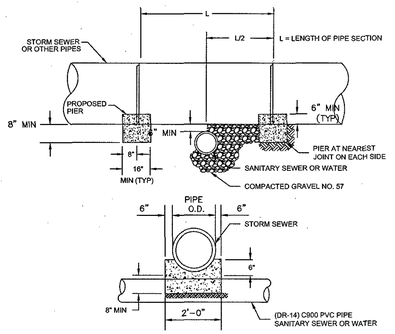

WESTERN VIRGINIA REGIONAL – CONSTRUCTION DETAIL

CONCRETE PIER — 01/01/14 — G-8

1. BEDDING, HAUNCHING AND INITIAL BACKFILL CONSTRUCTION SHALL BE IN ACCORDANCE WITH THIS DETAIL AND MANUFACTURER'S RECOMMENDATION.
2. ALL PVC PIPE SHALL BE BEDDED IN COMPACTED VDOT #57 OR #68 STONE.
3. IN VDOT ROW, THE CONTRACTOR SHALL REPLACE THE PAVEMENT AS REQUIRED AND SPECIFIED BY VDOT . IN ROANOKE CITY, CONTRACTOR SHALL REPLACE PAVEMENT AS REQUIRED BY CITY OF ROANOKE RIGHT OF WAY EXCAVATION AND RESTORATION STANDARDS, LATEST EDITION.
4. ALL CONSTRUCTION WITHIN THE PUBLIC RIGHT-OF-WAY SHALL BE AS SPECIFIED BY VDOT OR APPLICABLE LOCALITY.
5. PRIOR TO CONSTRUCTION, CONTRACTOR IS RESPONSIBLE FOR SECURING ALL REQUIRED PERMITS FROM VDOT AND/OR APPLICABLE LOCALITY.
6. IN AREAS SUBJECTED TO VEHICULAR TRAFFIC, BEDDING STONE AND FILL SHALL BE PLACED IN 6" LIFTS AND SHALL BE COMPACTED TO AT LEAST 95% OF MAXIMUM DENSITY AS DETERMINED BY ASTM D 698.
7. ALL SEWER LINE PIPE SHALL BE BEDDED IN COMPACTED GRANULAR MATERIAL. BEDDING REQUIREMENTS FOR DUCTILE SEWER LINE ARE DEPENDENT ON MANUFACTURER'S BEDDING CRITERIA.
8. BENCH CUT ON EACH SIDE OF PAVEMENT SHALL BE IN ACCORDANCE WITH VDOT OR APPLICABLE LOCALITY'S SPECIFICATIONS.
9. ALL EXCAVATIONS SHALL COMPLY WITH OSHA TECHNICAL MANUAL, CHAPTER 2, TITLED "EXCAVATIONS: HAZARD RECOGNITION IN TRENCHING AND SHORING."
10. THE TRACER WIRE SHALL BE PLACED ALONG THE LOWER QUADRANT OF THE PIPE. THE WIRE SHALL NOT TOUCH THE PIPE, BUT SHALL BE A MAXIMUM OF 6" FROM THE PIPE. NON-METALLIC SPACERS MAY BE USED TO MAINTAIN A SET DISTANCE FROM THE UTILITY.

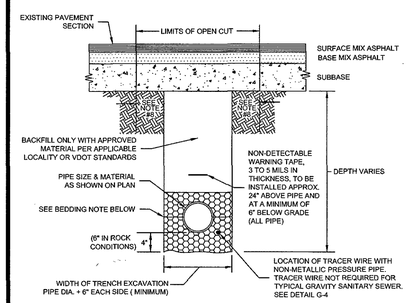

BEDDING: FOR WATERLINES, INSTALL BEDDING STONE TO SPRING LINE OF PIPE AT A MINIMUM, OR PER MANUFACTURER'S RECOMMENDATION. FOR SEWER LINES, BEDDING SHALL BE MINIMUM 6" ABOVE PIPE.

WESTERN VIRGINIA REGIONAL – CONSTRUCTION DETAIL

BEDDING AND BACKFILL UNDER PAVEMENT AND IN RIGHT-OF-WAY — 08/01/15 — G-12

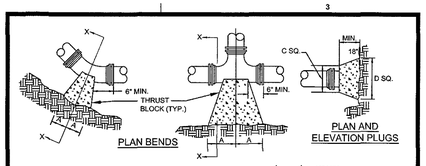

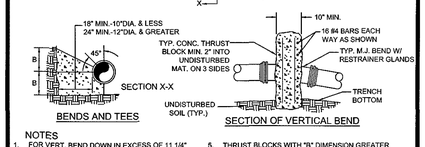

NOTES
1. FOR VERT. BEND DOWN IN EXCESS OF 11 1/4" BEND, ANCHORAGE SHALL BE DESIGNED BY ENGINEER.
2. FOR VERT. BEND UPWARD, BLOCKING TO BE SIMILAR TO THAT FOR HORIZ. BEND.
3. GLANDS & BOLTS SHALL BE PROTECTED FROM CONC. WITH PLASTIC SHEETING WHEN POURING THRUST BLOCKS.
4. ALL THRUST BLOCK & SUPPORT CONCRETE SHALL BE 3000 PSI READY MIX CONCRETE.
5. THRUST BLOCKS WITH "B" DIMENSION GREATER THAN 30" SHALL HAVE THE RESTRAINED PIPE INSTALLED WITH A MINIMUM OF 4' OF COVER.
6. REFER TO "MINIMUM THRUST RESTRAINT OF PIPE JOINTS DESIGN LENGTHS" DETAIL FOR WHEN THRUST BLOCKS ARE REQUIRED TO BE USED.
7. WHEN THRUST BLOCK IS REQUIRED BUT NOT FEASIBLE TO CONSTRUCT, THRUST COLLAR SHALL BE USED. SEE "THRUST COLLAR" DETAIL.

PRESSURE = 200psi
BEARING = 2000psf
FACTOR OF SAFETY = 1.5

PIPE SIZE	90° BEND		45° BEND		22 1/2° BEND		11 1/4° BEND		TEE		PLUG	
	A	B	A	B	A	B	A	B	A	B	C	D
4"	8"	12"	8"	8"	6"	6"	6"	6"	11"	9"	10"	6"
6"	18"	12"	8"	10"	8"	8"	8"	8"	11"	10"	12"	18"
8"	18"	13"	10"	10"	8"	8"	8"	8"	11"	12"	12"	24"
10"	20"	16"	12"	14"	8"	12"	8"	12"	14"	16"	16"	30"
12"	20"	16"	12"	14"	8"	12"	8"	12"	14"	16"	16"	30"
16"	26"	20"	16"	18"	11"	13"	11"	13"	18"	20"	20"	36"
24"	82"	42"	62"	30"	44"	22"	22"	16"	82"	42"	82"	42"
30"	185"	42"	100"	42"	52"	42"	40"	30"	185"	42"	185"	42"

WESTERN VIRGINIA REGIONAL – CONSTRUCTION DETAIL

THRUST BLOCK REQUIREMENTS — 02/10/15 — W-18

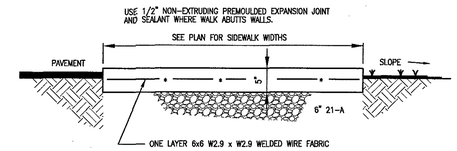

001 / C5.1 SIDEWALK DETAILS
NOT TO SCALE

1. FOR 6" FIRE LINE, EXTERIOR VAULT DIMENSIONS SHALL BE (L x W x H) 6' X 6' X 5' WITH DOMESTIC TAP MADE INSIDE VAULT AS SHOWN BELOW.
2. FOR 8" FIRE LINE EXTERIOR VAULT DIMENSIONS SHALL BE (L X W X H) 6' X 6' X 6' WITH DOMESTIC TAP MADE OUTSIDE VAULT. BALL VALVE WITH LOCKING TABS SHALL BE PROVIDED INSIDE VAULT TO ALLOW FOR ISOLATION OF DOMESTIC METER.
3. SINGLE DETECTOR CHECK VALVE SHALL BE WILKINS 310 DALM , WATTS ES-SS07F - BP, OR APPROVED EQUAL WITH FLANGED END CONNECTIONS, BYPASS ASSEMBLY, AND ONE OS&Y GATE VALVE.
4. BYPASS ASSEMBLY SHALL INCLUDE 2 BALL VALVES TO ISOLATE METER.
5. DOMESTIC SHALL BE TYPE K COPPER WITH GRIP JOINT FITTINGS, BALL VALVE AT TAPPING SADDLE (WITH LOCKING TABS) AND CHECK VALVE ON OUTLET.
6. DOMESTIC METER AND BYPASS METER TO BE SUPPLIED BY OWNER AND INSTALLED BY VENDOR.
7. "UNI FLANGE" ADAPTOR FLANGE, OR APPROVED EQUAL, OR FLANGED - PLAIN END PIPING REQUIRED FOR INLET AND OUTLET PIPING.
8. VAULT TO BE INSTALLED ON MIN. 6" COMPACTED VDOT #57 STONE WITH FILTER FABRIC PLACED BETWEEN BOTTOM OF VAULT AND STONE BEDDING. FILTER FABRIC TO EXTEND VERTICALLY A MINIMUM OF 6" ON ALL FOUR SIDES OF VAULT.

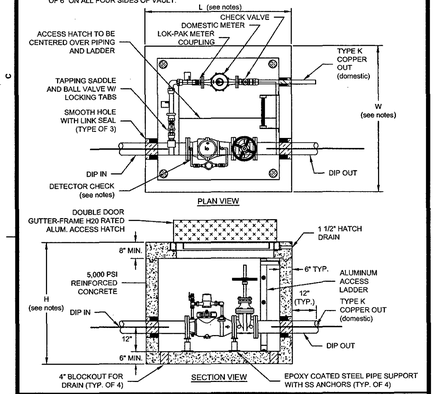

WESTERN VIRGINIA REGIONAL – CONSTRUCTION DETAIL

COMMERCIAL METER VAULT — 02/10/15 — W-7

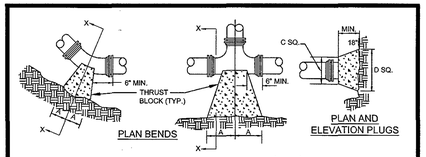

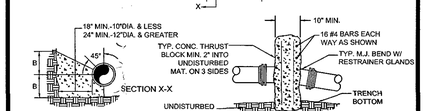

NOTES
1. FOR VERT. BEND DOWN IN EXCESS OF 11 1/4" BEND, ANCHORAGE SHALL BE DESIGNED BY ENGINEER.
2. FOR VERT. BEND UPWARD, BLOCKING TO BE SIMILAR TO THAT FOR HORIZ. BEND.
3. GLANDS & BOLTS SHALL BE PROTECTED FROM CONC. WITH PLASTIC SHEETING WHEN POURING THRUST BLOCKS.
4. ALL THRUST BLOCK & SUPPORT CONCRETE SHALL BE 3000 PSI READY MIX CONCRETE.
5. THRUST BLOCKS WITH "B" DIMENSION GREATER THAN 30" SHALL HAVE THE RESTRAINED PIPE INSTALLED WITH A MINIMUM OF 4' OF COVER.
6. REFER TO "MINIMUM THRUST RESTRAINT OF PIPE JOINTS DESIGN LENGTHS" DETAIL FOR WHEN THRUST BLOCKS ARE REQUIRED TO BE USED.
7. WHEN THRUST BLOCK IS REQUIRED BUT NOT FEASIBLE TO CONSTRUCT, THRUST COLLAR SHALL BE USED. SEE "THRUST COLLAR" DETAIL.

PRESSURE = 200psi
BEARING = 2000psf
FACTOR OF SAFETY = 1.5

PIPE SIZE	90° BEND		45° BEND		22 1/2° BEND		11 1/4° BEND		TEE		PLUG	
	A	B	A	B	A	B	A	B	A	B	C	D
4"	8"	12"	8"	8"	6"	6"	6"	6"	11"	9"	10"	6"
6"	18"	12"	8"	10"	8"	8"	8"	8"	11"	10"	12"	18"
8"	18"	13"	10"	10"	8"	8"	8"	8"	11"	12"	12"	24"
10"	20"	16"	12"	14"	8"	12"	8"	12"	14"	16"	16"	30"
12"	20"	16"	12"	14"	8"	12"	8"	12"	14"	16"	16"	30"
16"	26"	20"	16"	18"	11"	13"	11"	13"	18"	20"	20"	36"
24"	82"	42"	62"	30"	44"	22"	22"	16"	82"	42"	82"	42"
30"	185"	42"	100"	42"	52"	42"	40"	30"	185"	42"	185"	42"

WESTERN VIRGINIA REGIONAL – CONSTRUCTION DETAIL

THRUST BLOCK REQUIREMENTS — 02/10/15 — W-18

1. TRAFFIC BEARING BOX AND LID REQUIRED IN TRAFFIC AREAS (CAPITOL FOUNDRY VB-9*S).
2. SEWER LATERAL AND CLEANOUT PIPING SHALL BE ASTM D3034 SDR 26. SEWER LATERAL FITTINGS SHALL BE OF SAME SDR RATING AS THE SEWER MAIN. SCHEDULE 40 SOLVENT WELD PIPE AND FITTINGS MAY BE USED FOR THE SEWER LATERAL AND CLEANOUT ASSEMBLY WITH APPROVAL FROM THE PARTICIPATING UTILITY.
3. ALL PIPE SHALL BE OF SAME SIZE.
4. NO BENDS ARE ALLOWED IN THE LATERAL FROM THE MAIN TO THE CLEANOUT STACK WYE. (EXCEPT FOR DEEP SEWER, AS SHOWN BELOW).
5. ALL MAIN LINE TAPS ON ACTIVE MAINS SHALL BE PERFORMED BY PARTICIPATING UTILITY.
6. PIPING ON PRIVATE SIDE OF CLEANOUT TO BE INSTALLED PER GOVERNING JURISDICTION REQUIREMENTS.
7. MINIMUM LATERAL SIZE: 4" FOR RESIDENTIAL SERVICE, 6" FOR NON-RESIDENTIAL SERVICE.
8. SEWER CLEANOUTS SHALL BE SAME SIZE AS SEWER LATERAL.
9. MINIMUM COVER FOR ALL SEWER LATERALS SHALL BE THREE (3') FEET.
10. PROPERTY OWNER RESPONSIBLE FOR INSTALLING CLEANOUT ON PROPERTY LINE (IN ACCORDANCE WITH THIS DETAIL) WHEN MAINTENANCE OCCURS.
11. LOWEST SERVED FINISHED FLOOR ELEVATION SHALL BE A MINIMUM OF THREE FEET (3') ABOVE THE TOP OF THE MAIN AT THE POINT WHERE THE SERVICE LATERAL CONNECTS TO THE MAIN.
12. WHEN CONNECTING TO EXISTING LATERAL USE FERNCO FLEXIBLE COUPLING.

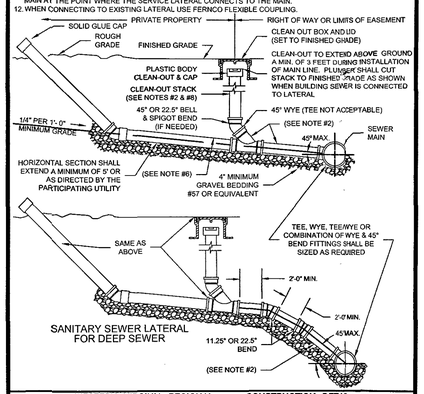

WESTERN VIRGINIA REGIONAL – CONSTRUCTION DETAIL

SANITARY SEWER LATERAL — 01/01/14 — S-6

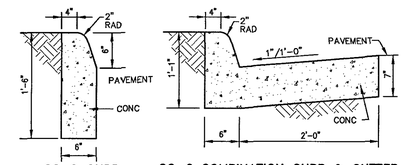

CG-2 CURB — CG-6 COMBINATION CURB & GUTTER

002 / C5.1 CURBING
NO SCALE

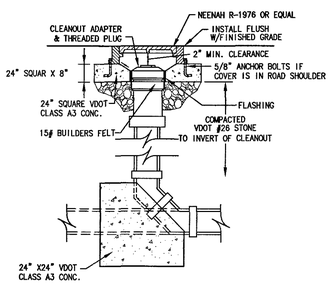

TRAFFIC BEARING OR GRASS

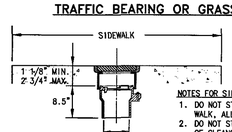

CONCRETE WALK

NOTES FOR SIDEWALK APPLICATIONS:
1. DO NOT STRIKE SHAPE OF COLLAR WITHIN CONC WALK, ALLOW WALK TO BE COLLAR.
2. DO NOT STRIKE WALK JOINT THRU OR WITHIN 5" OF CLEANOUT FERRULE.
3. USE JOSAM #56076-5 (X=pipe size) SERIES CLEANOUT, CAST IRON WITH DUCTILE IRON TOP, MOUNT FLUSH WITH FINISHED GRADE.

NOTES FOR PAVEMENT & GRASS APPLICATIONS:
1. FOR INSTALLATION WITHIN EXISTING PAVEMENT, PATCH SHALL MATCH EXISTING PAVEMENT SECTION UNLESS PRIME AND SEAL THEN USE SM-9.5A PATCH (3" MIN).
2. PVC CLEANOUT WITH 10" NEENAH R-1976 TRAFFIC BEARING CLEANOUT FRAME AND COVER, OR APPROVED EQUAL.

003 / C5.1 CLEANOUT DETAIL
NO SCALE

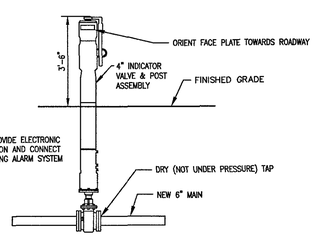

004 / C5.1 POST INDICATOR VALVE INSTALLATION
NO SCALE
NOTE: REFER TO SPECIFICATIONS FOR PROCEDURE AND NOTIFICATION FOR ANY INTERRUPTION IN WATER SERVICE.

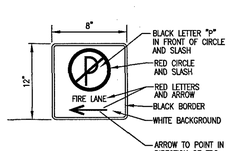

005 / C1.2 / C5.1 NO PARKING FIRE LANE SIGN
NO SCALE

Baskervill

SPECTRUM DESIGN
architects | engineers

PROJECT ENGINEER MAR
CHECKED BY MAR
DRAWN BY THL

COMMONWEALTH OF VIRGINIA
MICHAEL A. RAKES
Lic. No. 28199
7/02/18
PROFESSIONAL ENGINEER

COPYRIGHT 2018 BASKERVILL. USE OF THIS WORK IN WHOLE OR IN PART IS FORBIDDEN WITHOUT EXPRESSED WRITTEN CONSENT.

PROJECT NUMBER
2.12018.0

SPECTRUM JOB #
18007

120 LUCK AVENUE
120 LUCK AVENUE SW ROANOKE, VA

ISSUE
07/02/2018
PERMIT DRAWINGS

CIVIL-DETAILS

C5.1

BASKERVILL, P.O. BOX 400, RICHMOND, VA 23218-0400
TEMPLATE 2018.1 5/31/2018 8:09:08 AM C:\Users\mulledge\AppData\Local\Temp\Temp1_120 Luck Model Update.zip\2.180108.0 - 120 Luck Avenue - ARCH - 2018 Units Model.rvt