1. SETTER TO BE A.Y. McDONALD 720-215W2CO33, FORD VB72-15W-11-33 OR APPROVED EQUAL.
2. SADDLES MUST BE USED WITH ALL PLASTIC & DUCTILE IRON PIPE. SERVICE SADDLES SHALL BE USED IN ACCORDANCE WITH WATER DISTRIBUTION PIPING SPECIFICATION. SERVICE SADDLES FOR PLASTIC PIPE SHALL BE: POWERSEAL 3417, OR 3412AS, ROMAC 202S, OR 306, OR FORD METER FS202 OR FS303. FOR DUCTILE IRON PIPE USE THE ABOVE OR POWERSEAL 3413, ROMAC 202 OR FORD METER F202.
3. METER BOX SHALL BE CARSONMID-STATES PLASTICS, INC. PLASTIC BOX WITH FORD "A" DOMESTIC SERIES FRAME OR BINGHAM & TAYLOR 180-18 AWEH FRAME WITH A NICOR DOMESTIC 12.25 CX LID WITH SENSUS RECESS, ADS CORRUGATED HDPE BOX WITH FORD "A" DOMESTIC SERIES FRAME OR BINGHAM & TAYLOR 180-18 AWEH FRAME WITH A NICOR DOMESTIC 12.25 CX LID WITH SENSUS RECESS OR APPROVED EQUAL. METER BOX SHALL NOT BE PLACED IN AREAS SUBJECT TO VEHICULAR TRAFFIC. IF TRAFFIC BEARING BOX IS REQUIRED, DESIGN ENGINEER SHALL CONSULT WITH PARTICIPATING UTILITY TO DETERMINE SITE SPECIFIC REQUIREMENTS.CORPORATION STOP SHALL BE FORD FB1000-4-G-NL, MUELLER B-25008 OR APPROVED EQUAL.
4. SERVICE SHALL BE "K" TYPE COPPER, OR COPPER TUBE SIZE POLYETHYLENE (PE) 4710, SDR-9 (200 psi).
5. WHENEVER SIDEWALK EXISTS OR IS PROPOSED, MODIFY METER LOCATION AS DIRECTED.

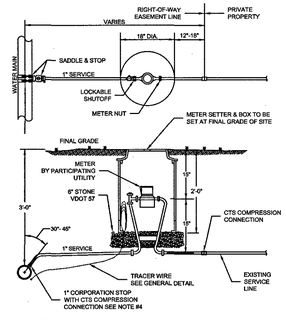

WESTERN VIRGINIA REGIONAL - CONSTRUCTION DETAIL

SINGLE RESIDENTIAL WATER SERVICE (REPLACEMENT OF EXISTING SERVICE) — 05/05/17 — W-2

1. SETTER TO BE A.Y. McDONALD 720-215W2CO33, FORD VB72-15W-11-33 OR APPROVED EQUAL.
2. SADDLES MUST BE USED WITH ALL PLASTIC & DUCTILE IRON PIPE. SERVICE SADDLES SHALL BE USED IN ACCORDANCE WITH WATER DISTRIBUTION PIPING SPECIFICATION. SERVICE SADDLES FOR PLASTIC PIPE SHALL BE: POWERSEAL 3417, OR 3412AS, ROMAC 202S, OR 306, OR FORD METER FS202 OR FS303. FOR DUCTILE IRON PIPE USE THE ABOVE OR POWERSEAL 3413, ROMAC 202 OR FORD METER F202.
3. METER BOX SHALL BE CARSONMID-STATES PLASTICS, INC. PLASTIC BOX WITH FORD "A" DOMESTIC SERIES FRAME OR BINGHAM & TAYLOR 180-18 AWEH FRAME WITH A NICOR DOMESTIC 12.25 CX LID WITH SENSUS RECESS, ADS CORRUGATED HDPE BOX WITH FORD "A" DOMESTIC SERIES FRAME OR BINGHAM & TAYLOR 180-18 AWEH FRAME WITH A NICOR DOMESTIC 12.25 CX LID WITH SENSUS RECESS OR APPROVED EQUAL. METER BOX SHALL NOT BE PLACED IN AREAS SUBJECT TO VEHICULAR TRAFFIC. IF TRAFFIC BEARING BOX IS REQUIRED, DESIGN ENGINEER SHALL CONSULT WITH PARTICIPATING UTILITY TO DETERMINE SITE SPECIFIC REQUIREMENTS.CORPORATION STOP SHALL BE FORD FB1000-4-G-NL, MUELLER B-25008 OR APPROVED EQUAL.
4. CORPORATION STOP SHALL BE FORD FB1000-4-G-NL, MUELLER B-25008 OR APPROVED EQUAL.
5. SERVICE SHALL BE "K" TYPE COPPER, OR COPPER TUBE SIZE POLYETHYLENE (PE) 4710, SDR-9 (200 psi).

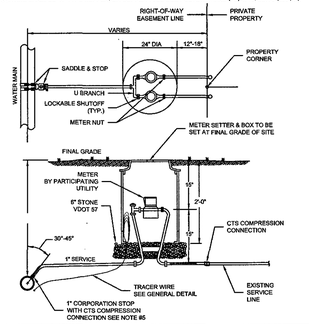

WESTERN VIRGINIA REGIONAL - CONSTRUCTION DETAIL

DOUBLE RESIDENTIAL WATER SERVICE (REPLACEMENT OF EXISTING SERVICE) — 05/05/17 — W-4E

1. ALL METERS ARE TO BE PROVIDED AND INSTALLED BY PARTICIPATING UTILITY AT OWNER/DEVELOPER'S EXPENSE. METER BOX, SERVICE, AND SETTER TO BE FURNISHED AND INSTALLED BY OWNER/DEVELOPER.
2. SADDLES MUST BE USED WITH ALL PLASTIC & DUCTILE IRON PIPE. SERVICE SADDLES SHALL BE USED IN ACCORDANCE WITH WATER DISTRIBUTION PIPING SPECIFICATION. SERVICE SADDLES FOR PLASTIC PIPE SHALL BE: POWERSEAL 3417, OR 3412AS, ROMAC 202S, OR 306, OR FORD METER FS202 OR FS303. FOR DUCTILE IRON PIPE USE THE ABOVE OR POWERSEAL 3413, ROMAC 202 OR FORD METER F202.
3. CORPORATION STOP SHALL BE FORD FB1000-4-G-NL, MUELLER B-25008 OR APPROVED EQUAL.
4. METER BOXES LOCATED IN AREAS SUBJECT TO VEHICULAR TRAFFIC SHALL BE CONCRETE WITH H-20 RATED TRAFFIC BEARING HATCH. ALL OTHER METER BOXES SHALL BE CARSONMID-STATES PLASTICS, INC. PLASTIC BOX, ADS CORRUGATED HDPE BOX, OR APPROVED EQUAL. MINIMUM METER BOX 8 LID DIAMETERS SHALL BE IN ACCORDANCE WITH SIZING CHART BELOW.
5. SERVICE SHALL BE "K" TYPE COPPER OR PE 4710 ,CTS O.D., MINIMUM CELL CLASS 445474E AND 445474D.
6. COPPER METER SETTER TO BE FORD, A.Y. MCDONALD OR APPROVED EQUAL WITH ANGLE DUAL CHECK VALVE AND BYPASS WITH LOCKABLE SHUTOFF VALVE. FOR 1-2" METERS, SETTER SHALL BE 2" FROM THE 17" LAY LENGTH AND SERVICE LINE SHALL BE 3' FROM THE MAIN TO THE OUTSIDE OF THE PRIVATE SIDE OF THE VAULT OR BOX.
7. SERVICES REQUIRING METERS LARGER THAN 2-INCH SHALL BE REVIEWED BY THE PARTICIPATING UTILITY ON A CASE BY CASE BASIS.

TRAFFIC BEARING LOCATION — NON TRAFFIC BEARING LOCATION

TRAFFIC BEARING VAULT AND H-20 RATED HATCH SHALL BE SIZED IN ACCORDANCE WITH DIMENSIONAL REQUIREMENTS SHOWN BELOW.

SIZING CHART LID

METER BOX SIZE (NIML)	DIA. (NIML)	MIN.	CICW & LID MODEL (OR APPROVED EQUAL)
5/8"	18"	11½"	CICW 18 RD 8 LID CICW 18 RD 8 LID FRAME & NICOR DOMESTIC 12.25 CX LID WITH SENSUS RECESS
3/4"- 1"	24"	23"	FORD BC-24 OR W/ BROOKMAN SAFE T FORD BC-24 OR W/ BROOKMAN SAFE T
1.5"-2"	30"	20"	FORD BC-30 OR W/ BROOKMAN SAFE T

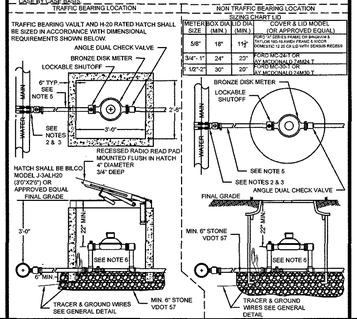

WESTERN VIRGINIA REGIONAL - CONSTRUCTION DETAIL

COMMERCIAL WATER SERVICE METER SIZES 5/8" - 2" — 03/31/18 — W-5

1. FRAME SHALL BE SECURED TO VAULT BY EITHER BOLTS OR BUTYL MASTIC.

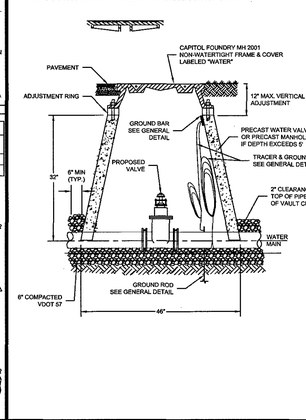

WESTERN VIRGINIA REGIONAL - CONSTRUCTION DETAIL

WATER LINE VALVE & VAULT — 01/01/14 — W-9

1. WHEN APPROVED BY PARTICIPATING UTILITY, FIRE HYDRANT ASSEMBLIES MAY BE USED AS PERMANENT END OF LINES.
2. DETAIL FOR UP TO 3" MAINS, LARGER LINES SEE WATER SYSTEM DESIGN STANDARDS FOR MIN. FLUSHING VALVE REQUIREMENTS.
3. THE END OF A PIPELINE SHALL NOT TERMINATE IN A PAVED AREA OR UNDER A CONCRETE CURB & GUTTER.
4. THE PIPING AND "STREET ELS" BETWEEN THE MAIN LINE AND 2" GATE VALVE SHALL BE LEAD FREE BRASS OR DUCTILE IRON.
5. RESTRAINED JOINTS SHALL BE INSTALLED BEFORE MJ PLUG FOR DISTANCE SHOWN IN THE "MINIMUM THRUST RESTRAINT OF PIPE JOINTS DESIGN LENGTHS" DETAIL FOR VALVE/PLUG AND CORRESPONDING PLUG DIAMETER.
6. FRAME SHALL BE SECURED TO VAULT BY EITHER BOLTS OR BUTYL MASTIC.

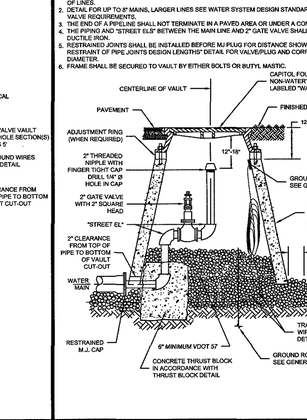

WESTERN VIRGINIA REGIONAL - CONSTRUCTION DETAIL

PERMANENT END OF LINE BLOW-OFF ASSEMBLY — 02/10/15 — W-10

1. SEE RESIDENTIAL WATER SERVICE DETAIL FOR SADDLE REQUIREMENTS.
2. LARGER COMBINATION VALVE MAY BE REQUIRED DEPENDING ON APPLICATION.
3. FRAME SHALL BE SECURED TO VAULT BY EITHER BOLTS OR BUTYL MASTIC.

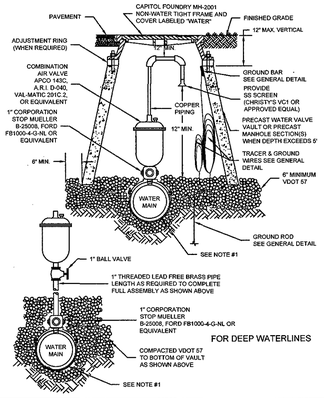

WESTERN VIRGINIA REGIONAL - CONSTRUCTION DETAIL

COMBINATION AIR VALVE ASSEMBLY — 02/10/15 — W-13

1. USE MODERATELY STIFF MIX OF NON SHRINK GROUT, SAND, AND 1/2" AND LESS DIAMETER GRAVEL WITH 28 DAYS, STRENGTH AT MINIMUM 3,000 P.S.I.
2. MIX IS TO BE FORCED INTO ALL GROOVES AND UNDER PLANGE OF PIPE AND LEFT AT OR ABOVE TOP OF FLANGE.
3. DO NOT BACKFILL AROUND FLANGE AND COVER, FOR 48 HOURS AFTER CONCRETE IS PLACED. THE USE OF HIGH EARLY STRENGTH CEMENT WOULD REDUCE TIME TO 24 HRS.)
4. RESTRICT TRAFFIC LOAD FOR A MINIMUM OF 24 HOURS.
5. FRAME SHALL BE SECURED TO VAULT BY EITHER BOLTS OR BUTYL MASTIC.

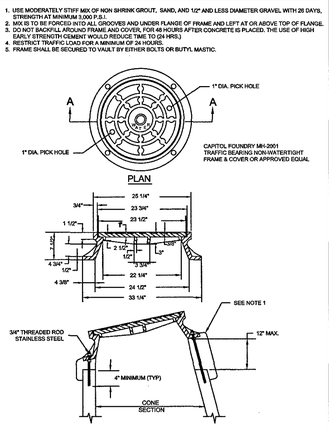

WESTERN VIRGINIA REGIONAL - CONSTRUCTION DETAIL

VAULT FRAME AND COVER — 01/01/14 — W-16

1. PUBLIC HYDRANTS SHALL BE PAINTED SILVER WITH AN OIL-BASED PAINT. PRIVATE HYDRANTS SHALL ALSO BE PAINTED SILVER WITH AN OIL-BASED PAINT UNLESS OTHERWISE SPECIFIED BY THE JURISDICTIONAL FIRE MARSHALL PRIOR TO OR IMMEDIATELY FOLLOWING INSTALLATION.
2. FIRE HYDRANT SHALL BE INSTALLED 2' MIN. AND 4' MAX. FROM BACK OF CURB OR 6' MIN. AND 12' MAX. FROM EDGE OF PAVEMENT WHEN CURB IS NOT PRESENT. FIRE HYDRANT TO BE INSTALLED WITHIN RIGHT-OF-WAY OR EASEMENT LINE.
3. AREA AROUND HYDRANT AT A RADIUS OF 4' TO BE LEVEL AND UNOBSTRUCTED.
4. WATERPROOF BAGS OR OUT OF SERVICE RINGS SHALL BE PLACED OVER ALL NEWLY INSTALLED FIRE HYDRANTS.
5. HYDRANT ASSEMBLIES SHALL BE RODDED AND RESTRAINED WITH APPROVED M.J. GLAND RESTRAINTS. HIGH PRESSURE (OVER 150 PSI) ALSO REQUIRES CONCRETE THRUST BLOCKS AS SHOWN BELOW.
6. WHEN HYDRANT LATERALS(S) IS APPROVED BY THE PARTICIPATING UTILITY TO BE LONGER IN LENGTH, MAKING THE CONTINUOUS SECTION OF PIPE ON EACH SIDE OF THE GATE VALVE UNFEASIBLE, RESTRAINED PIPE JOINTS SHALL BE INSTALLED BETWEEN THE TEE AND GATE VALVE IN LIEU OF RODDING. HOWEVER, A RODDED CONTINUOUS SECTION OF PIPE SHALL ALWAYS BE INSTALLED BETWEEN THE GATE VALVE AND HYDRANT.
7. TWO WRAPS OF TRACER WIRE SHALL BE WRAPPED AROUND BASE OF HYDRANT.
8. APPROVED MODELS - AVK MODEL 2780, AFC MODEL B-84-B-5, MUELLER CENTURION A423, KENNEDY K81D, M&H 1250 OR EQUIVALENT.
9. WHERE HYDRANT LATERAL(S) IS APPROVED BY THE PARTICIPATING UTILITY TO BE LONGER IN LENGTH, MAKING THE CONTINUOUS SECTION OF PIPE ON EACH SIDE OF THE GATE VALVE UNFEASIBLE, RESTRAINED PIPE JOINTS SHALL BE INSTALLED BETWEEN THE TEE AND GATE VALVE IN LIEU OF RODDING. HOWEVER, A RODDED CONTINUOUS SECTION OF PIPE SHALL ALWAYS BE INSTALLED BETWEEN THE GATE VALVE AND HYDRANT.
10. WHERE VALVE BOXES ARE UTILIZED, A TOP HAT ADAPTOR MUST ALSO BE USED.

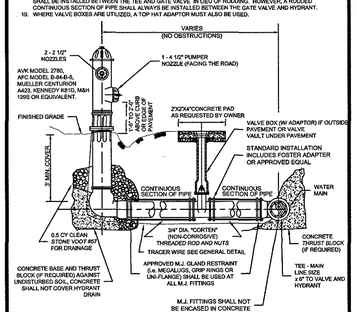

WESTERN VIRGINIA REGIONAL - CONSTRUCTION DETAIL

FIRE HYDRANT ASSEMBLY — 02/10/15 — W-17

PIPE SIZE	PIPE MAT'L	90° BEND	45° BEND	22 ½° BEND	11 ¼° BEND	VALVE / PLUG ONDITE	TEE BRANCH ONDITE	BLTUCER ONDITE	45° VERT.	22 ½° VERT.	11 ¼° VERT.
						30	30	40			
4"	D.I.	26'	19"	6"	3"	50'	26'	17'	21'	10'	5"
6"	D.I.	38'	27'	6"	3"	50'	26'	26'	21'	10'	5"
8"	D.I.	36'	21'	9"	4'	63'	41'	27'	27'	13'	7"
10"	D.I.	43"	21'	9'	5'	77'	53'	26'	32'	16'	8"
12"	D.I.	31'	21'	10'	5'	91'	67'	27'	38'	18'	9"
16"	D.I.	87'	36'	18'	9'	176'	99'	75'	38'	18'	9'
24"	D.I.	123'	51'	25'	13'	255'	134'	77'	51'	25'	13'
4"	PVC	27'	11'	3"	2'	60'	25'	30'	25'	10'	5"
6"	PVC	29'	21'	6'	3'	78'	25'	40'	32'	16'	9"
8"	PVC	37'	21'	8'	4'	102'	49'	43'	42'	21'	10'
10"	PVC	44'	21'	9'	5'	122'	68'	41'	51'	25'	12'
12"	PVC	51'	21'	11'	6'	143'	95'	42'	60'	29'	15'
16"	PVC	87'	36'	18'	9'	176'	100'	75'	60'	29'	15'
24"	PVC	123'	51'	25'	13'	255'	134'	96'	84'	40'	20'

FACTOR OF SAFETY = 1.5

1. ALL JOINTS SHALL BE RESTRAINED ON BOTH SIDES OF THE FITTING AND DOCUMENTED BY THE INSPECTOR FOR THE LENGTH SHOWN UNLESS OTHERWISE INDICATED.
2. RESTRAINED LENGTH SHOWN REFERS TO ANY DESIGNED OR POTENTIAL LINE STOP, INCLUDING ALL GATE VALVES.
3. RESTRAINED LENGTH SHOWN REFERS TO THE BRANCH LINE ONLY. THE CONTINUOUS PIPE LENGTH OF THE MAIN RUN SHALL BE A MINIMUM OF 10' ON EACH SIDE OF THE TEE.
4. RESTRAINED LENGTH SHOWN IS BASED ON REDUCING PIPE DIAMETER TO ONE SIZE SMALLER THAN PIPE LISTED (ANY OTHER DIAMETER REDUCTION WILL REQUIRE ADDITIONAL CALCULATIONS BEFORE INSTALLATION). RESTRAINED LENGTH SHOWN IS UPSTREAM ON THE LARGE SIDE OF THE REDUCER.
5. 12" AND SMALLER DIAMETER: IF UNDER 150 PSI WORKING PRESSURE, RESTRAINED JOINT(S) ARE TO BE USED. IF EQUAL TO OR OVER 150 PSI WORKING PRESSURE, BOTH THRUST BLOCK(S) AND RESTRAINED JOINT(S) SHALL BE USED.
   LARGER THAN 12" DIAMETER: IF UNDER 100 PSI WORKING PRESSURE, RESTRAINED JOINT(S) ARE TO BE USED. IF EQUAL TO OR OVER 100 PSI WORKING PRESSURE, BOTH THRUST BLOCK(S) AND RESTRAINED JOINT(S) SHALL BE USED (UNLESS OTHERWISE APPROVED BY THE PARTICIPATING UTILITY).
6. FOR RESTRAINED JOINT PIPING REQUIREMENTS AT FITTING R.J. PVC AND R.J. DIP MAY BE USED INTERCHANGEABLY WITH APPROVAL FROM PARTICIPATING UTILITY. CONTRACTOR MUST PLAN ACCORDINGLY FOR THE DIFFERENCE IN PVC AND DIP BELL AND SPIGOT DIMENSIONS.

WESTERN VIRGINIA REGIONAL - CONSTRUCTION DETAIL

MINIMUM THRUST RESTRAINT OF PIPE JOINTS DESIGN LENGTHS — 02/10/15 — W-19

1. TAPPING SLEEVE SHALL BE POWERSEAL MODEL 3490 TYPE 304 STAINLESS STEEL WITH CARBON STEEL FLANGE, ROMAC'S MODEL SST III, FORD MODEL FTSS WITH CARBON STEEL FLANGE OR APPROVED EQUIVALENT. SLEEVE SHALL BE RATED AT 100 PSI OVER WORKING PRESSURE AND MUST HAVE A TEST PLUG.
2. TAPPING VALVE SHALL BE AVK RESILIENT SEATED GATE VALVE SERIES 25 MJFL, MUELLER T-2360 RESILIENT WEDGE TAPPING VALVE WITH MJFL, OR AFC SERIES 2500 RESILIENT WEDGE TAPPING VALVE WITH MJFL. VALVE SHALL BE RATED AT 250 PSI.
3. TAPPING SLEEVE AND VALVE SHALL BE FULL PORT TO ACCEPT FULL SIZE SHELL CUTTER.
4. STEEL FLANGE SHALL MEET AWWA C207.
5. SIZE-ON-SIZE TAPPING NOT ALLOWED UNLESS APPROVED BY PARTICIPATING UTILITY.

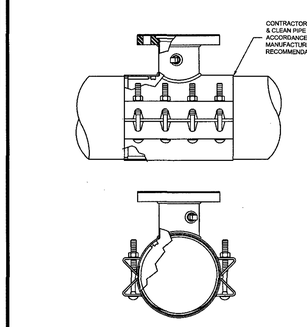

WESTERN VIRGINIA REGIONAL - CONSTRUCTION DETAIL

TAPPING SLEEVE AND VALVE — 01/01/14 — W-21

INSTALLATION OF DUCTILE IRON WATER MAINS
TABLE 3 AWWA C600-05
Maximum Joint Deflection Full Length of Pipe - Push on Type Joint

Nominal Pipe Size (inches)	Deflection Angle - θ (degree)	Maximum Offset - S* (Inches) Joint Length 18-Feet	Joint Length 20-Feet	Approximate Radius of Curve - R* Produced by Succession of Joints Joint Length 18-Feet	Joint Length 20-Feet
3	5°	19	21	205	230
4	5°	19	21	205	230
6	5°	19	21	205	230
8	5°	19	21	205	230
10	5°	19	21	205	230
12	5°	19	21	205	230
14	3°	11	12	340	380
16	3°	11	12	340	380
18	3°	11	12	340	380
20	3°	11	12	340	380
24	3°	11	12	340	380
30	3°	11	12	340	380

* SEE FIGURE 4.
For 14-inch and larger push-on joints, maximum deflection angle may be larger than shown above. Consult the manufacturer.

INSTALLATION OF DUCTILE IRON WATER MAINS
TABLE 4 AWWA C600-05
Maximum Joint Deflection Full Length of Pipe - Mechanical Joint Pipe

Nominal Pipe Size (inches)	Deflection Angle - θ (degree)	Maximum Offset - S* (Inches) Joint Length 18-Feet	Joint Length 20-Feet	Approximate Radius of Curve - R* Produced by Succession of Joints Joint Length 18-Feet	Joint Length 20-Feet
3	8°-18"	31	35	125	140
4	8°-18"	31	35	125	140
6	7°-07"	27	30	145	160
8	5°-21"	20	22	195	220
10	5°-21"	20	22	195	220
12	5°-21"	20	22	195	220
14	3°-35"	13.5	15	285	320
16	3°-35"	13.5	15	285	320
18	3°-00"	11	12	340	380
20	3°-00"	11	12	340	380
24	2°-23"	9	10	450	500

* SEE FIGURE 4.

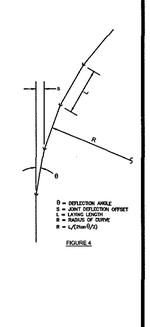

FIGURE 4

WESTERN VIRGINIA REGIONAL - CONSTRUCTION DETAIL

DUCTILE IRON PIPE DEFLECTION ALLOWANCE TABLES — 01/01/14 — W-22

1. A WORK AREA WITH A MINIMUM CLEAR SPACE OF TEN FEET BEHIND THE BACK OF CURB SHALL BE PROVIDED FOR ALL WATER AND SEWER MAINS. A DEDICATED WATER OR SEWER EASEMENT MUST BE PROVIDED IF THERE IS LESS THAN TEN FEET BEHIND THE BACK OF CURB AND THE LIMITS OF RIGHT-OF-WAY.

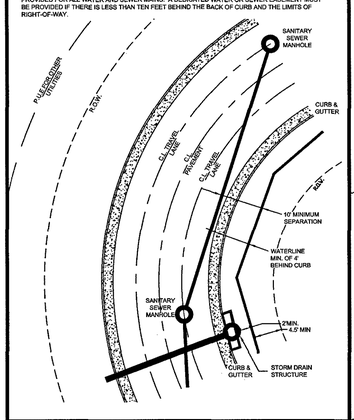

WESTERN VIRGINIA REGIONAL - CONSTRUCTION DETAIL

PUBLIC WATER AND SANITARY SEWER STANDARD CONFIGURATION IN PUBLIC ROADS — 01/01/14 — G-1

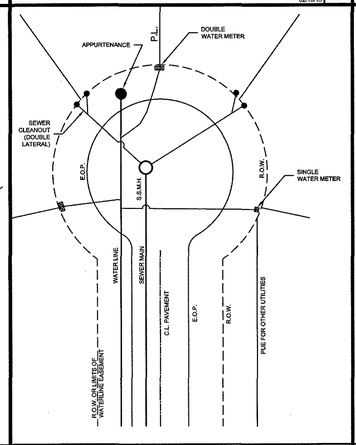

WESTERN VIRGINIA REGIONAL - CONSTRUCTION DETAIL

PUBLIC WATER AND SANITARY SEWER STANDARD CUL-DE-SAC CONFIGURATION — 01/01/14 — G-2

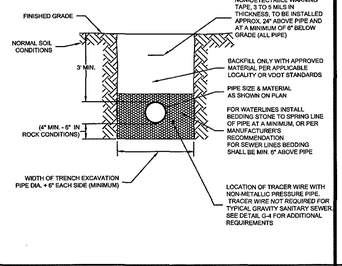

WESTERN VIRGINIA REGIONAL - CONSTRUCTION DETAIL

BEDDING AND BACKFILL OUTSIDE OF PAVED AREAS — 08/01/15 — G-11

1. BEDDING, HAUNCHING AND INITIAL BACKFILL CONSTRUCTION SHALL BE IN ACCORDANCE WITH THIS DETAIL AND MANUFACTURER'S RECOMMENDATION.
2. ALL PVC PIPE SHALL BE BEDDED IN COMPACTED VDOT #57 OR #68 STONE, OR CRUSHER RUN.
3. IN AREAS SUBJECTED TO VEHICULAR TRAFFIC, BEDDING STONE AND FILL SHALL BE PLACED IN 6" LIFTS FROM BOTTOM OF TRENCH TO 1' ABOVE THE PIPE AND THE REMAINING SHALL BE PLACED IN 10" LIFTS AND SHALL BE COMPACTED TO AT LEAST 90% OF MAXIMUM DENSITY AS DETERMINED BY ASTM D 698.
4. BEDDING REQUIREMENTS FOR DUCTILE IRON WATER LINE ARE DEPENDENT ON MANUFACTURER'S BEDDING CRITERIA.
5. ALL EXCAVATIONS SHALL COMPLY WITH OSHA TECHNICAL MANUAL, CHAPTER 2, TITLED "EXCAVATIONS: HAZARD RECOGNITION IN TRENCHING AND SHORING."
6. THE TRACER WIRE SHALL BE PLACED ALONG THE LOWER QUADRANT OF THE PIPE. THE WIRE SHALL NOT TOUCH THE PIPE, BUT SHALL BE A MAXIMUM OF 6" FROM THE PIPE. NON-METALLIC SPACERS MAY BE USED TO MAINTAIN A SET DISTANCE FROM THE UTILITY.

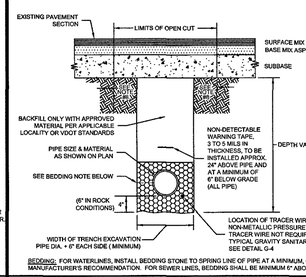
EXISTING PAVEMENT SECTION
LIMITS OF OPEN CUT
SURFACE MIX ASPHALT
BASE MIX ASPHALT
SUBBASE
BACKFILL ONLY WITH APPROVED MATERIAL PER APPLICABLE LOCALITY O