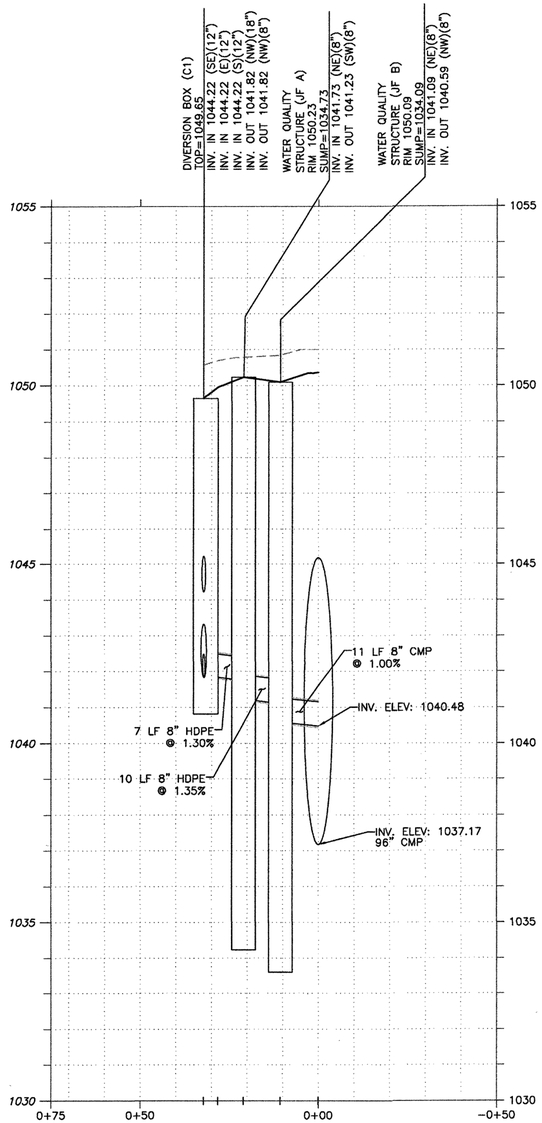

STORM SEWER PROFILE C2
VERTICAL SCALE: 1"=2'
HORIZONTAL SCALE: 1"=20'

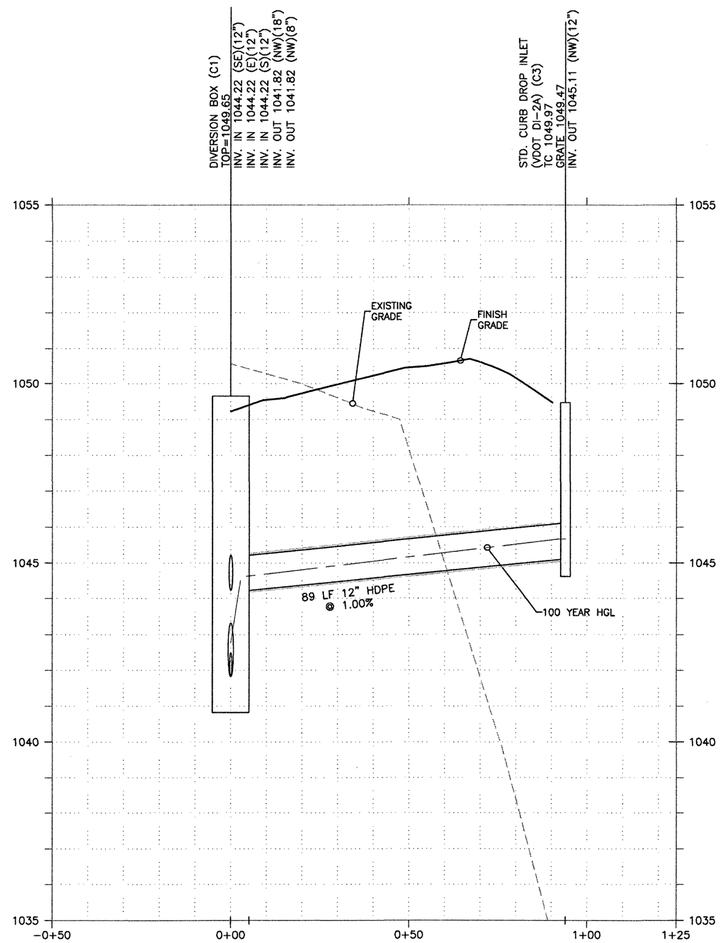

STORM SEWER PROFILE C3
VERTICAL SCALE: 1"=2'
HORIZONTAL SCALE: 1"=20'

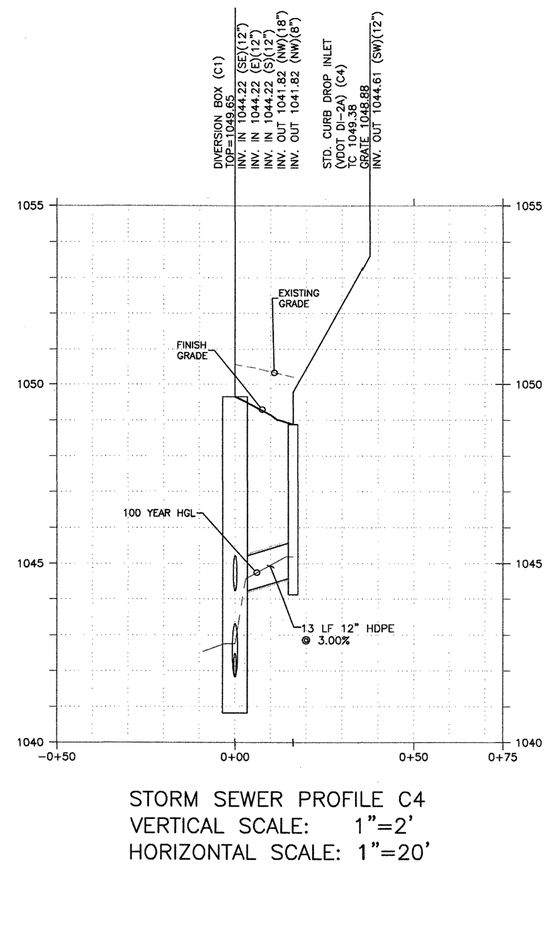

STORM SEWER PROFILE C4
VERTICAL SCALE: 1"=2'
HORIZONTAL SCALE: 1"=20'

SHEET NO.
C-3.3

COMMONWEALTH OF VIRGINIA
JOHN H. NOURZAD
Lic. No. 019570
PROFESSIONAL ENGINEER
JAN 11 2016

REV-4	12-07-15	REA	GD	CB	CB
	DATE	PRN	PM	DES	DRW

STORM SEWER PROFILES
WALMART SUPERCENTER #3243
4530 CHALLENGER AVENUE
ROANOKE VIRGINIA

GreenbergFarrow
1430 W. PEACHTREE ST. NW SUITE 200
ATLANTA, GA 30309
PHONE: (404) 873-7000
FAX: (404) 601 3970
DWG NAME: ROANOKE VA
JOB NO.: 201305410

MURPHY OIL USA, INC.
MURPHY USA
200 PEACH STREET
P.O. BOX 7000
EL DORADO, AR 71730-7000