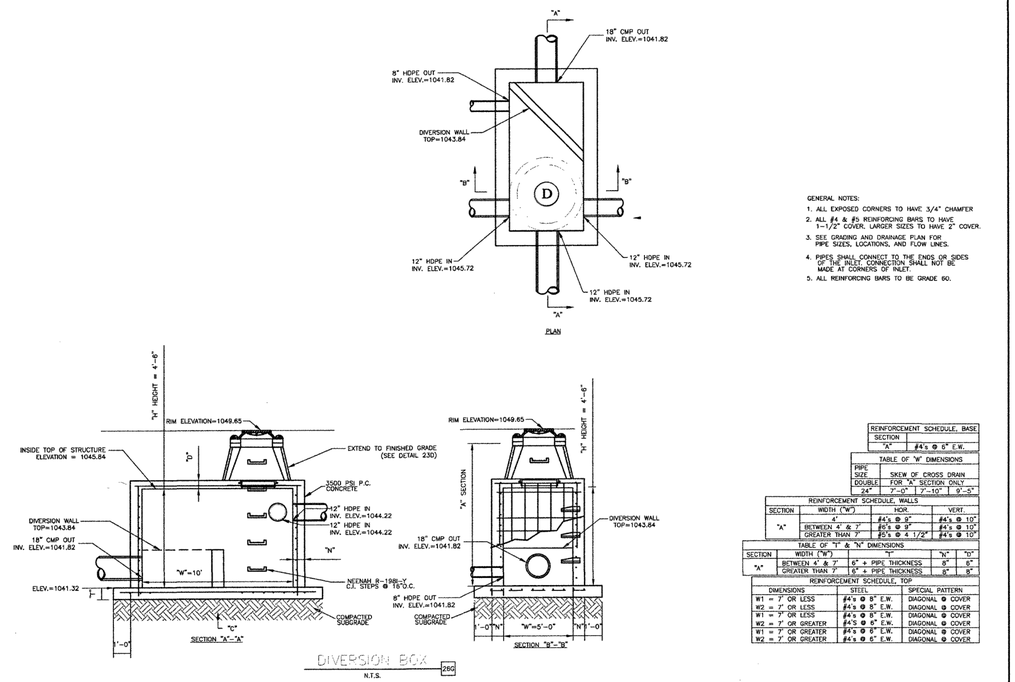

GENERAL NOTES:

1. ALL EXPOSED CORNERS TO HAVE 3/4" CHAMFER
2. ALL #4 & #5 REINFORCING BARS TO HAVE 1-1/2" COVER. LARGER SIZES TO HAVE 2" COVER.
3. SEE GRADING AND DRAINAGE PLAN FOR PIPE SIZES, LOCATIONS, AND FLOW LINES.
4. PIPES SHALL CONNECT TO THE ENDS OR SIDES OF THE INLET. CONNECTION SHALL NOT BE MADE AT CORNERS OF INLET.
5. ALL REINFORCING BARS TO BE GRADE 60.

REINFORCEMENT SCHEDULE, BASE	
SECTION "A"	#4's @ 6" E.W.

TABLE OF "W" DIMENSIONS			
PIPE SIZE	SKEW OF CROSS DRAIN FOR "A" SECTION ONLY		
DOUBLE	0°	15°	30°
24"	7'-0"	7'-10"	9'-5"

REINFORCEMENT SCHEDULE, WALLS			
SECTION	WIDTH ("W")	HOR.	VERT.
"A"	4'	#4's @ 9"	#4's @ 10"
	BETWEEN 4' & 7'	#5's @ 9"	#4's @ 10"
	GREATER THAN 7'	#5's @ 4 1/2"	#4's @ 10"

TABLE OF "T" & "N" DIMENSIONS				
SECTION	WIDTH ("W")	"T"	"N"	"O"
"A"	BETWEEN 4' & 7'	6" + PIPE THICKNESS	8"	8"
	GREATER THAN 7'	6" + PIPE THICKNESS	8"	8"

REINFORCEMENT SCHEDULE, TOP			
DIMENSIONS	STEEL	SPECIAL PATTERN	
W1 = 7' OR LESS	#4's @ 8" E.W.	DIAGONAL @ COVER	
W2 = 7' OR LESS	#4's @ 8" E.W.	DIAGONAL @ COVER	
W1 = 7' OR LESS	#4's @ 8" E.W.	DIAGONAL @ COVER	
W2 = 7' OR GREATER	#4'S @ 6" E.W.	DIAGONAL @ COVER	
W1 = 7' OR GREATER	#4's @ 6" E.W.	DIAGONAL @ COVER	
W2 = 7' OR GREATER	#4's @ 6" E.W.	DIAGONAL @ COVER	

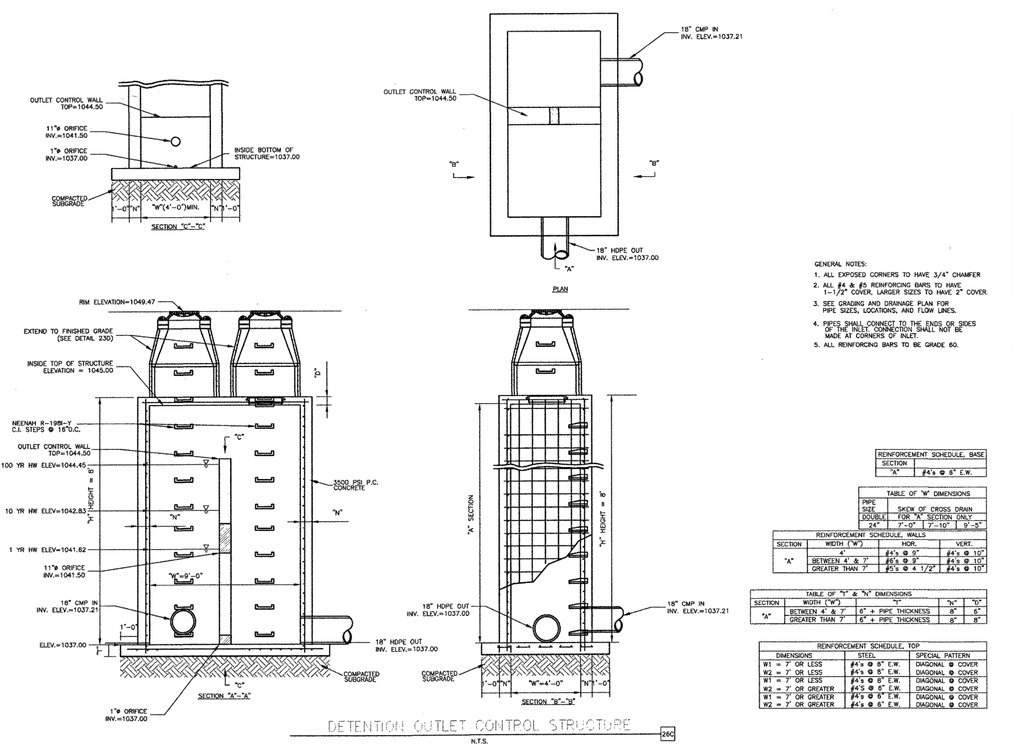

GENERAL NOTES:

1. ALL EXPOSED CORNERS TO HAVE 3/4" CHAMFER
2. ALL #4 & #5 REINFORCING BARS TO HAVE 1-1/2" COVER. LARGER SIZES TO HAVE 2" COVER.
3. SEE GRADING AND DRAINAGE PLAN FOR PIPE SIZES, LOCATIONS, AND FLOW LINES.
4. PIPES SHALL CONNECT TO THE ENDS OR SIDES OF THE INLET. CONNECTION SHALL NOT BE MADE AT CORNERS OF INLET.
5. ALL REINFORCING BARS TO BE GRADE 60.

REINFORCEMENT SCHEDULE, BASE	
SECTION "A"	#4's @ 6" E.W.

TABLE OF "W" DIMENSIONS			
PIPE SIZE	SKEW OF CROSS DRAIN FOR "A" SECTION ONLY		
DOUBLE	0°	15°	30°
24"	7'-0"	7'-10"	9'-5"

REINFORCEMENT SCHEDULE, WALLS			
SECTION	WIDTH ("W")	HOR.	VERT.
"A"	4'	#4's @ 9"	#4's @ 10"
	BETWEEN 4' & 7'	#5's @ 9"	#4's @ 10"
	GREATER THAN 7'	#5's @ 4 1/2"	#4's @ 10"

TABLE OF "T" & "N" DIMENSIONS				
SECTION	WIDTH ("W")	"T"	"N"	"O"
"A"	BETWEEN 4' & 7'	6" + PIPE THICKNESS	8"	8"
	GREATER THAN 7'	6" + PIPE THICKNESS	8"	8"

REINFORCEMENT SCHEDULE, TOP		
DIMENSIONS	STEEL	SPECIAL PATTERN
W1 = 7' OR LESS	#4's @ 8" E.W.	DIAGONAL @ COVER
W2 = 7' OR LESS	#4's @ 8" E.W.	DIAGONAL @ COVER
W1 = 7' OR LESS	#4's @ 8" E.W.	DIAGONAL @ COVER
W2 = 7' OR GREATER	#4'S @ 6" E.W.	DIAGONAL @ COVER
W1 = 7' OR GREATER	#4's @ 6" E.W.	DIAGONAL @ COVER
W2 = 7' OR GREATER	#4's @ 6" E.W.	DIAGONAL @ COVER

1. ALL METERS ARE TO BE PROVIDED AND INSTALLED BY PARTICIPATING UTILITY AT OWNER/DEVELOPER'S EXPENSE. METER BOX, SERVICE, AND SETTER TO BE FURNISHED AND INSTALLED BY OWNER/DEVELOPER IN ACCORDANCE WITH THE MINIMUM REQUIREMENTS SHOWN BELOW.
2. SADDLES MUST BE USED WITH ALL PLASTIC & DUCTILE IRON PIPE. SERVICE SADDLES SHALL BE USED IN ACCORDANCE WITH WATER DISTRIBUTION PIPING SPECIFICATION. SERVICE SADDLES FOR PLASTIC PIPE SHALL BE: POWERSEAL 3417, OR 3412AS, ROMAC 202S, OR 306. OR FORD METER FS202 OR FS303. FOR DUCTILE IRON PIPE USE THE ABOVE OR POWERSEAL 3413, ROMAC 202 OR FORD METER F202.
3. CORPORATION STOP SHALL BE FORD FB1000-4-G-NL, MUELLER B-25008 OR APPROVED EQUAL.
4. METER BOXES LOCATED IN AREAS SUBJECT TO VEHICULAR TRAFFIC SHALL BE CONCRETE WITH H-20 RATED TRAFFIC BEARING HATCH. ALL OTHER METER BOXES SHALL BE CARSON/MID-STATES PLASTICS, INC. PLASTIC BOX, ADS CORRUGATED HDPE BOX, OR APPROVED EQUAL. MINIMUM METER BOX & LID DIAMETERS SHALL BE IN ACCORDANCE WITH SIZING CHART BELOW.
5. SERVICE SHALL BE "K" TYPE COPPER OR P.E. 4710 ,CTS O.D., MINIMUM CELL CLASS 445474E AND 445474D.
6. COPPER METER SETTER TO BE FORD, A.Y. MCDONALD OR APPROVED EQUAL WITH ANGLE DUAL CHECK VALVE AND BYPASS HAVING LOCKABLE SHUTOFF VALVE.
7. SERVICES REQUIRING METERS LARGER THAN 2-INCH SHALL BE REVIEWED BY THE PARTICIPATING UTILITY ON A CASE BY CASE BASIS.

TRAFFIC BEARING LOCATION

TRAFFIC BEARING VAULT AND H-20 RATED HATCH SHALL BE SIZED IN ACCORDANCE WITH DIMENSIONAL REQUIREMENTS SHOWN BELOW.

NON TRAFFIC BEARING LOCATION

SIZING CHART LID

METER SIZE	BOX DIA. (MIN.)	LID DIA. (MIN.)	COVER & LID MODEL (OR APPROVED EQUAL)
5/8"	18"	11½"	FORD A32-T OR AY MCDONALD 74M32AT
3/4"- 1"	24"	20"	FORD MC-24-T OR AY MCDONALD 74M24 T
1 1/2"-2"	30"	20"	FORD MC-30-T OR AY MCDONALD 74M30 T

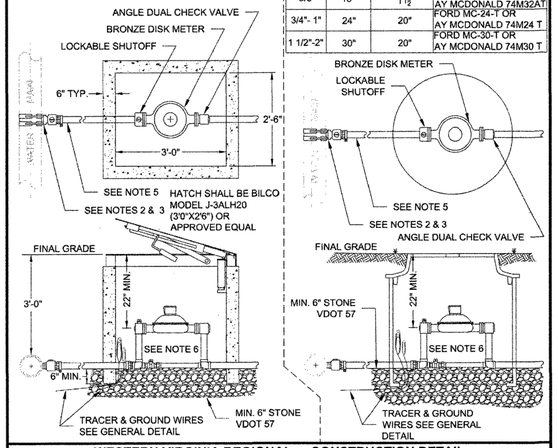

WESTERN VIRGINIA REGIONAL - CONSTRUCTION DETAIL

COMMERCIAL
WATER SERVICE
METER SIZES 5/8" - 2"

02/10/15 **W-5**

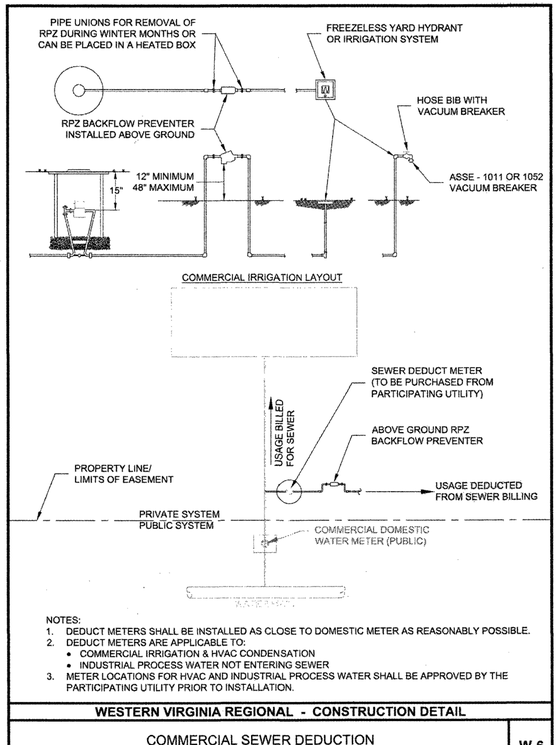

NOTES:

1. DEDUCT METERS SHALL BE INSTALLED AS CLOSE TO DOMESTIC METER AS REASONABLY POSSIBLE.
2. DEDUCT METERS ARE APPLICABLE TO:
   - COMMERCIAL IRRIGATION & HVAC CONDENSATION
   - INDUSTRIAL PROCESS WATER NOT ENTERING SEWER
3. METER LOCATIONS FOR HVAC AND INDUSTRIAL PROCESS WATER SHALL BE APPROVED BY THE PARTICIPATING UTILITY PRIOR TO INSTALLATION.

WESTERN VIRGINIA REGIONAL - CONSTRUCTION DETAIL

COMMERCIAL SEWER DEDUCTION
METER INSTALLATION

01/01/14 **W-6**

1. BEDDING, HAUNCHING AND INITIAL BACKFILL CONSTRUCTION SHALL BE IN ACCORDANCE WITH THIS DETAIL AND MANUFACTURER'S RECOMMENDATION.
2. ALL PVC PIPE SHALL BE BEDDED IN COMPACTED VDOT #57 OR #58 STONE.
3. IN VDOT ROW, THE CONTRACTOR SHALL REPLACE THE PAVEMENT AS REQUIRED AND SPECIFIED BY VDOT. IN ROANOKE CITY, CONTRACTOR SHALL REPLACE PAVEMENT AS REQUIRED BY CITY OF ROANOKE RIGHT OF WAY EXCAVATION AND RESTORATION STANDARDS, LATEST EDITION.
4. ALL CONSTRUCTION WITHIN THE PUBLIC RIGHT-OF-WAY SHALL BE AS SPECIFIED BY VDOT OR APPLICABLE LOCALITY.
5. PRIOR TO CONSTRUCTION, CONTRACTOR IS RESPONSIBLE FOR SECURING ALL REQUIRED PERMITS FROM VDOT AND/OR APPLICABLE LOCALITY.
6. IN AREAS SUBJECTED TO VEHICULAR TRAFFIC, BEDDING STONE AND FILL SHALL BE PLACED IN 6" LIFTS AND SHALL BE COMPACTED TO AT LEAST 95% OF MAXIMUM DENSITY AS DETERMINED BY ASTM D 698.
7. ALL SEWER LINE PIPE SHALL BE BEDDED IN COMPACTED GRANULAR MATERIAL. BEDDING REQUIREMENTS FOR DUCTILE SEWER LINE ARE DEPENDENT ON MANUFACTURER'S BEDDING CRITERIA.
8. BENCH CUT ON EACH SIDE OF PAVEMENT SHALL BE IN ACCORDANCE WITH VDOT OR APPLICABLE LOCALITY'S SPECIFICATIONS.
9. ALL EXCAVATIONS SHALL COMPLY WITH OSHA TECHNICAL MANUAL, CHAPTER 2, TITLED "EXCAVATIONS: HAZARD RECOGNITION IN TRENCHING AND SHORING."
10. THE TRACER WIRE SHALL BE PLACED ALONG THE LOWER QUADRANT OF THE PIPE. THE WIRE SHALL NOT TOUCH THE PIPE, BUT SHALL BE A MAXIMUM OF 6" FROM THE PIPE. NON-METALLIC SPACERS MAY BE USED TO MAINTAIN A SET DISTANCE FROM THE UTILITY.

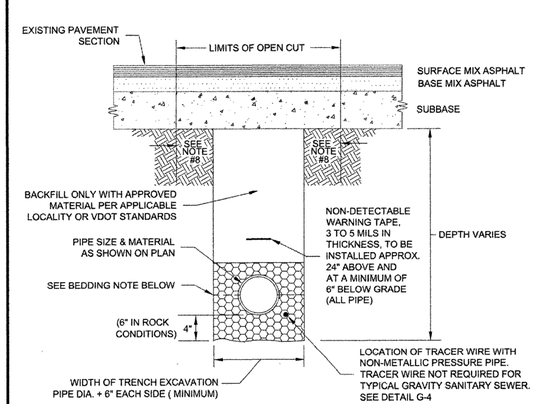

BEDDING: FOR WATERLINES, INSTALL BEDDING STONE TO SPRING LINE OF PIPE AT A MINIMUM, OR PER MANUFACTURER'S RECOMMENDATION. FOR SEWER LINES, BEDDING SHALL BE MINIMUM 6" ABOVE PIPE.

WESTERN VIRGINIA REGIONAL - CONSTRUCTION DETAIL

BEDDING AND BACKFILL
UNDER PAVEMENT AND IN RIGHT-OF-WAY 42B

01/01/14 **G-12**

1. BEDDING, HAUNCHING AND INITIAL BACKFILL CONSTRUCTION SHALL BE IN ACCORDANCE WITH THIS DETAIL AND MANUFACTURER'S RECOMMENDATION.
2. ALL PVC PIPE SHALL BE BEDDED IN COMPACTED VDOT #57 OR #58 STONE, OR CRUSHER RUN.
3. IN AREAS SUBJECTED TO VEHICULAR TRAFFIC, BEDDING STONE AND FILL SHALL BE PLACED IN 6" LIFTS FROM BOTTOM OF TRENCH TO 1' ABOVE THE PIPE AND THE REMAINING SHALL BE PLACED IN 10" LIFTS AND SHALL BE COMPACTED TO AT LEAST 90% OF MAXIMUM DENSITY AS DETERMINED BY ASTM D 698.
4. BEDDING REQUIREMENTS FOR DUCTILE IRON WATER LINE ARE DEPENDENT ON MANUFACTURER'S BEDDING CRITERIA.
5. ALL EXCAVATIONS SHALL COMPLY WITH OSHA TECHNICAL MANUAL, CHAPTER 2, TITLED "EXCAVATIONS: HAZARD RECOGNITION IN TRENCHING AND SHORING."
6. THE TRACER WIRE SHALL BE PLACED ALONG THE LOWER QUADRANT OF THE PIPE. THE WIRE SHALL NOT TOUCH THE PIPE, BUT SHALL BE A MAXIMUM OF 6" FROM THE PIPE. NON-METALLIC SPACERS MAY BE USED TO MAINTAIN A SET DISTANCE FROM THE UTILITY.

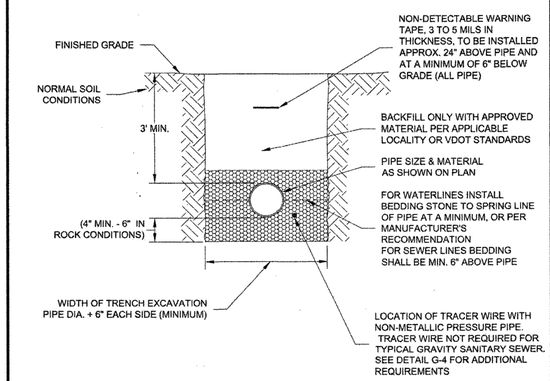

WESTERN VIRGINIA REGIONAL - CONSTRUCTION DETAIL

BEDDING AND BACKFILL
OUTSIDE OF PAVED AREAS 42B

01/01/14 **G-11**

SHEET NO. C-17

COMMONWEALTH OF VIRGINIA
JOHN H. NOURZAD
Lic. No. 019570
PROFESSIONAL ENGINEER

JAN 11 2016

REV-4	12-07-15	REA	GD	CB	CB
	DATE	PRN	PM	DES	DRW

DETAIL SHEET
WALMART SUPERCENTER #3243
4530 CHALLENGER AVENUE
ROANOKE VIRGINIA

GreenbergFarrow
1430 W. PEACHTREE ST. NW SUITE 200
ATLANTA, GA 30309
PHONE: (404) 607-4000
FAX: (404) 607-4001
DWG NAME: ROANOKE VA
JOB NO: 201305410

MURPHY OIL USA, INC.
MURPHY USA
200 PEACH STREET
P.O. BOX 7000
EL DORADO, AR 71730-7000