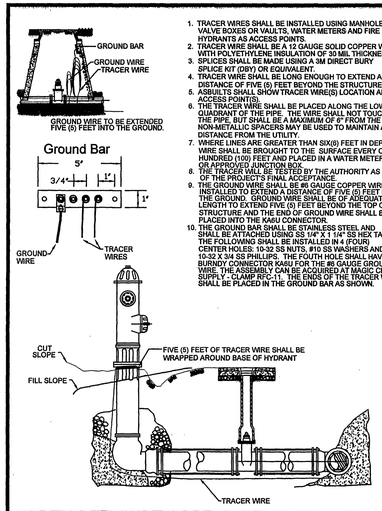


1. TRACER WIRES SHALL BE INSTALLED USING MANHOLES, VALVE BOXES OR VAULTS, WATER METERS AND FIRE HYDRANTS AS ACCESS POINTS.
2. TRACER WIRE SHALL BE A 12 GAUGE SOLID COPPER WIRE WITH POLYETHYLENE INSULATION OF 30 MIL THICKNESS.
3. SPLICES SHALL BE MADE USING A 3M DIRECT BURY SPLICE KIT (DBY) OR EQUIVALENT.
4. TRACER WIRE SHALL BE LONG ENOUGH TO EXTEND A DISTANCE OF FIVE (5) FEET BEYOND THE STRUCTURE.
5. ASBUILTS SHALL SHOW TRACER WIRE(S) LOCATION AND ACCESS POINT(S).
6. THE TRACER WIRE SHALL BE PLACED ALONG THE LOWER QUADRANT OF THE PIPE. THE WIRE SHALL NOT TOUCH THE PIPE, BUT SHALL BE A MAXIMUM OF 9" FROM THE PIPE. NON-METALLIC SPACERS MAY BE USED TO MAINTAIN A SET DISTANCE FROM THE UTILITY.
7. WHERE LINES ARE GREATER THAN SIX(6) FEET IN DEPTH, WIRE SHALL BE BROUGHT TO THE SURFACE EVERY ONE-HUNDRED (100) FEET AND PLACED IN A WATER METER BOX OR APPROVED JUNCTION BOX.
8. THE TRACER WILL BE TESTED BY THE AUTHORITY AS PART OF THE PROJECT'S FINAL ACCEPTANCE.
9. THE GROUND WIRE SHALL BE #6 GAUGE COPPER WIRE AND INSTALLED TO EXTEND A DISTANCE OF FIVE (5) FEET INTO THE GROUND. GROUND WIRE SHALL BE OF ADEQUATE LENGTH TO EXTEND FIVE (5) FEET BEYOND THE TOP OF STRUCTURE AND THE END OF GROUND WIRE SHALL BE PLACED INTO THE KAKU CONNECTOR.
10. THE GROUND BAR SHALL BE STAINLESS STEEL AND SHALL BE ATTACHED USING SS 1/4" X 1 1/4" SS HEX TAPCON. THE FOLLOWING SHALL BE INSTALLED IN 4 (FOUR) CENTER HOLES: 10-32 SS NUTS, #10 SS WASHERS AND 10-32 X 3/4 SS PHILLIPS. THE FOUTH HOLE SHALL HAVE A BURNDY CONNECTOR KAKU FOR THE #6 GAUGE GROUND WIRE. THE ASSEMBLY CAN BE ACQUIRED AT MAGIC CITY SUPPLY - CLAMP RFC-11. THE ENDS OF THE TRACER WIRES SHALL BE PLACED IN THE GROUND BAR AS SHOWN.

WESTERN VIRGINIA WATER AUTHORITY – CONSTRUCTION STANDARDS

| REVISION | DATE |
|---|---|
| | 07/01/04 |
| | 03/01/06 |

*TRACER WIRE FOR NON-METALLIC PRESSURE PIPE* — G-05

NOTES:

1. ALL MANHOLE FRAMES AND COVERS SHALL BE EAST JORDAN IRON WORKS, INC. WATERTIGHT MANHOLE FRAME MODEL #1045Z. WATERTIGHT COVER MODEL #1040AGS AND BOLT-DOWN MANHOLE COVER MODEL #1040ACLGS, OR APPROVED EQUAL. BOLT-DOWN MODEL TO BE USED IN AREAS SUBJECTED TO FLOODING OR AS DIRECTED BY THE AUTHORITY.
2. STEPS TO BE VERTICALLY ALIGNED.
3. THE FRAME AND COVER SHALL BE PROPERLY ALIGNED WITH THE 2 FOOT OPENING OF THE MANHOLE STRUCTURE AND BOLTED IN PLACE.
4. FLAT TOP MANHOLES MAY ONLY BE SUBSTITUTED WITH THE PERMISSION OF THE UTILITY DIRECTOR. WHEN USED, THE ECCENTRIC OPENING MUST LINE UP WITH THE STEPS.
5. SAMPLING MANHOLES IN TRAFFIC AREAS SHALL BE CONSTRUCTED AS PER MANHOLE DETAILS.
6. FLEXIBLE JOINT MANHOLE CONNECTION SHALL BE AS MANUFACTURED BY PRES-SEAL GASKET CORPORATION OR EQUAL.
7. GROUT ANNULAR SPACE BETWEEN PIPE AND PRECAST MANHOLE ON INSIDE OF MANHOLE.

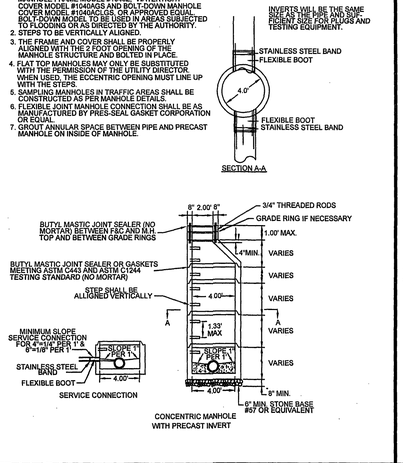


WESTERN VIRGINIA WATER AUTHORITY – CONSTRUCTION STANDARDS

| REVISION | DATE |
|---|---|
| | 07/01/04 |
| | 03/01/06 |

*4' STANDARD MANHOLE FOR PIPE 15" OR SMALLER* — S-01

NOTES:

1. ALL MANHOLE FRAMES AND COVERS SHALL BE EAST JORDAN IRON WORKS, INC. WATERTIGHT MANHOLE FRAME MODEL #1045Z. WATERTIGHT COVER MODEL #1040AGS AND BOLT-DOWN MANHOLE COVER MODEL #1040ACLGS, OR APPROVED EQUAL. BOLT-DOWN MODEL TO BE USED IN AREAS SUBJECTED TO FLOODING OR AS DIRECTED BY THE AUTHORITY.
2. STEPS TO BE VERTICALLY ALIGNED.
3. THE FRAME AND COVER SHALL BE PROPERLY ALIGNED WITH THE 2 FOOT OPENING OF THE MANHOLE STRUCTURE AND BOLTED IN PLACE.
4. RELINER BY DURAN INSIDE DROP WILL BE ALLOWED.
5. GROUT ANNULAR SPACE BETWEEN PIPE AND PRECAST MANHOLE ON INSIDE OF MANHOLE.
6. STEPS SHALL BE A MINIMUM OF 90 DEGREES FROM DROP.

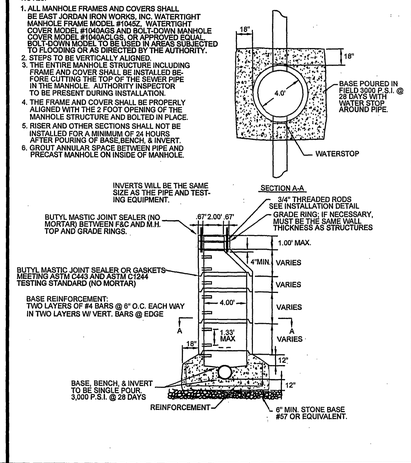


WESTERN VIRGINIA WATER AUTHORITY – CONSTRUCTION STANDARDS

| REVISION | DATE |
|---|---|
| | 07/01/04 |
| | 03/01/06 |

*STRADDLE MANHOLE FOR PIPE 15" OR SMALLER* — S-02

NOTES:

1. ALL MANHOLE FRAMES AND COVERS SHALL BE EAST JORDAN IRON WORKS, INC. WATERTIGHT MANHOLE FRAME MODEL #1045Z. WATERTIGHT COVER MODEL #1040AGS AND BOLT-DOWN MANHOLE COVER MODEL #1040ACLGS, OR APPROVED EQUAL. BOLT-DOWN MODEL TO BE USED IN AREAS SUBJECTED TO FLOODING OR AS DIRECTED BY THE AUTHORITY.
2. STEPS TO BE VERTICALLY ALIGNED.
3. THE FRAME AND COVER SHALL BE PROPERLY ALIGNED WITH THE 2 FOOT OPENING OF THE MANHOLE STRUCTURE AND BOLTED IN PLACE.
4. RELINER BY DURAN INSIDE DROP WILL BE ALLOWED.
5. GROUT ANNULAR SPACE BETWEEN PIPE AND PRECAST MANHOLE ON INSIDE OF MANHOLE.
6. STEPS SHALL BE A MINIMUM OF 90 DEGREES FROM DROP.

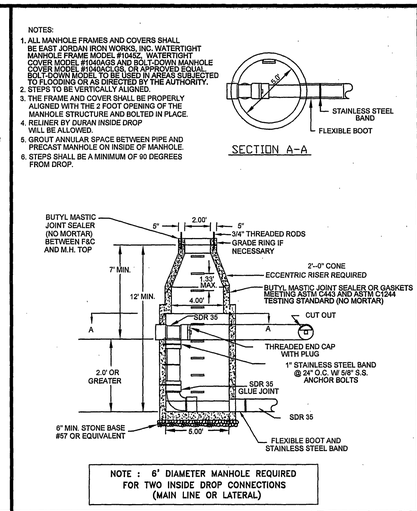


NOTE : 6' DIAMETER MANHOLE REQUIRED FOR TWO INSIDE DROP CONNECTIONS (MAIN LINE OR LATERAL)

WESTERN VIRGINIA WATER AUTHORITY – CONSTRUCTION STANDARDS

| REVISION | DATE |
|---|---|
| | 07/01/04 |
| | 03/01/06 |

*MAINLINE OR LATERAL INSIDE DROP MANHOLE (FOR USE WITH PVC PIPE)* — S-04

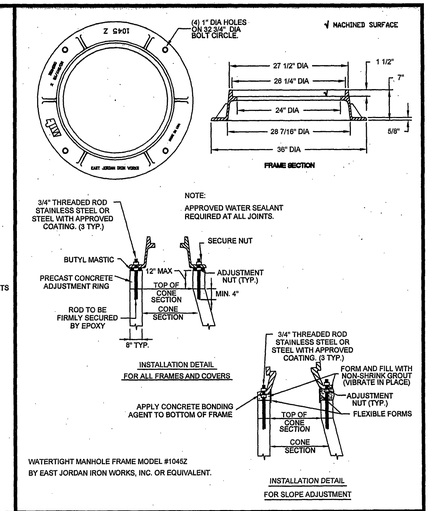


WATERTIGHT MANHOLE FRAME MODEL #1045Z BY EAST JORDAN IRON WORKS, INC. OR EQUIVALENT.

WESTERN VIRGINIA WATER AUTHORITY – CONSTRUCTION STANDARDS

| REVISION | DATE |
|---|---|
| | 07/01/04 |
| | 03/01/06 |

*WATERTIGHT MANHOLE FRAME* — S-05

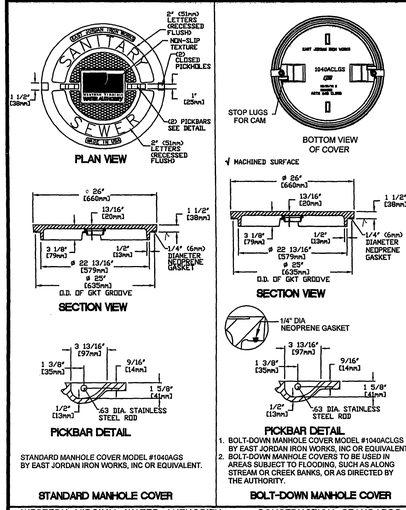


1. BOLT-DOWN MANHOLE COVER MODEL #1040ACLGS BY EAST JORDAN IRON WORKS, INC OR EQUIVALENT.
2. BOLT-DOWN MANHOLE COVERS TO BE USED IN AREAS SUBJECT TO FLOODING, SUCH AS ALONG STREAM OR CREEK BANKS, OR AS DIRECTED BY THE AUTHORITY.

WESTERN VIRGINIA WATER AUTHORITY – CONSTRUCTION STANDARDS

| REVISION | DATE |
|---|---|
| | 07/01/04 |
| | 03/01/06 |

*WATERTIGHT MANHOLE COVER* — S-06

GENERAL NOTES:

1. TRAFFIC BEARING BOX REQUIRED IN TRAFFIC AREAS.
2. ALL PIPE AND FITTINGS SHALL BE OF SIMILAR MATERIAL.
3. ALL PIPE SHALL BE OF SAME SIZE.
4. NO BENDS ARE ALLOWED IN THE LATERAL FROM THE MAIN TO THE CLEANOUT STACK WYE. (EXCEPT AS NOTED)
5. ALL MAIN LINE TAPS ON ACTIVE MAINS WILL BE PERFORMED BY WESTERN VIRGINIA WATER AUTHORITY.
6. PIPING BEHIND CLEANOUT TO BE INSTALLED PER BOCA CODE.
7. MINIMUM LATERAL SIZE:
   4" FOR RESIDENTIAL SERVICE
   6" FOR NON-RESIDENTIAL SERVICE
8. MINIMUM COVER FOR ALL SEWER LATERALS SHALL BE THREE(3) FEET.
9. PROPERTY OWNER RESPONSIBLE FOR INSTALLING CLEANOUT ON PROPERTY LINE WHEN MAINTENANCE OCCURS, IN ACCORDANCE WITH THIS STANDARD.
10. FLOWLINE AT CLEANOUT WYE SHALL BE A MINIMUM OF THREE FEET (3') BELOW LOWEST SERVED FINISHED FLOOR.

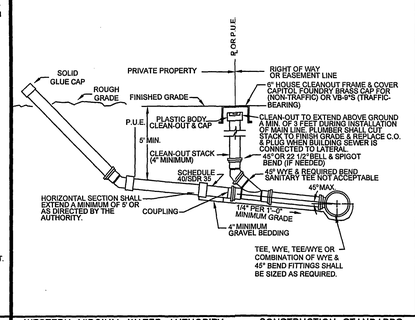


WESTERN VIRGINIA WATER AUTHORITY – CONSTRUCTION STANDARDS

| REVISION | DATE |
|---|---|
| | 07/01/04 |
| | 03/01/06 |

*SANITARY SEWER LATERAL* — S-08

GENERAL NOTES:

1. TRAFFIC BEARING BOX REQUIRED IN TRAFFIC AREAS.
2. ALL PIPE AND FITTINGS SHALL BE OF SIMILAR MATERIAL.
3. ALL PIPE SHALL BE OF SIZE SHOWN.
4. NO BENDS ARE ALLOWED IN THE LATERAL FROM THE MAIN TO THE CLEAN-OUT STACK WYE. (EXCEPT AS NOTED.)
5. ALL MAIN LINE TAPS ON ACTIVE MAINS WILL BE PERFORMED BY WESTERN VIRGINA WATER AUTHORITY.
6. PIPING BEHIND CLEANOUT TO BE INSTALLED PER BOCA CODE.
7. MINIMUM COVER FOR ALL SEWER LATERALS SHALL BE THREE (3') FEET.
8. PROPERTY OWNER RESPONSIBLE FOR INSTALLING CLEANOUT ON PROPERTY LINE WHEN MAINTENANCE OCCURS, IN ACCORDANCE WITH THIS STANDARD.
9. FLOWLINE AT CLEANOUT WYE SHALL BE A MINIMUM OF THREE FEET (3') BELOW LOWEST SERVED FINISHED FLOOR.

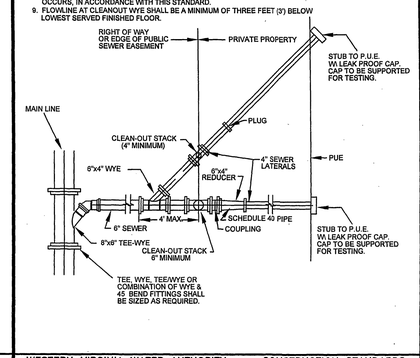


WESTERN VIRGINIA WATER AUTHORITY – CONSTRUCTION STANDARDS

| REVISION | DATE |
|---|---|
| | 07/01/04 |
| | 03/01/06 |

*COMBINED 6" BY TWO 4" LATERALS* — S-11

NOTES:

1. BEDDING, HAUNCHING AND INITIAL BACKFILL CONSTRUCTION SHALL BE IN ACCORDANCE WITH MANUFACTURER'S RECOMMENDATION.
2. ALL PVC PIPE SHALL BE BEDDED IN COMPACTED VDOT #57 OR #68 STONE.
3. IN AREAS NOT SUBJECTED TO VEHICULAR TRAFFIC, BEDDING STONE AND FILL SHALL BE PLACED IN 6" LIFTS FROM BOTTOM OF TRENCH TO 1' ABOVE THE PIPE AND THE REMAINING SHALL BE PLACED IN 10" LIFTS AND SHALL BE COMPACTED TO AT LEAST 95% OF MAXIMUM DENSITY AS DETERMINED BY ASTM D 698.
4. ALL SEWER LINE PIPE SHALL BE BEDDED IN COMPACTED GRANULAR MATERIAL. BEDDING REQUIREMENTS FOR DUCTILE SEWER LINE ARE DEPENDENT ON MANUFACTURER'S BEDDING CRITERIA.
5. ALL EXCAVATIONS SHALL COMPLY WITH OSHA TECHNICAL MANUAL, CHAPTER 2, TITLED "EXCAVATIONS: HAZARD RECOGNITION IN TRENCHING AND SHORING."

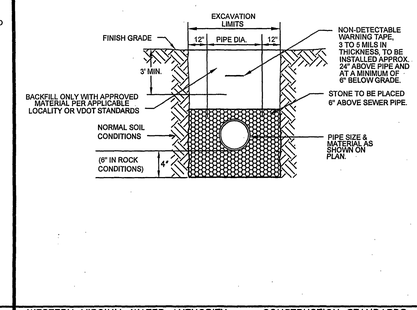


WESTERN VIRGINIA WATER AUTHORITY – CONSTRUCTION STANDARDS

| REVISION | DATE |
|---|---|
| | 07/01/04 |
| | 03/01/06 |

*BEDDING AND BACKFILL OUTSIDE OF PAVED AREAS* — S-30

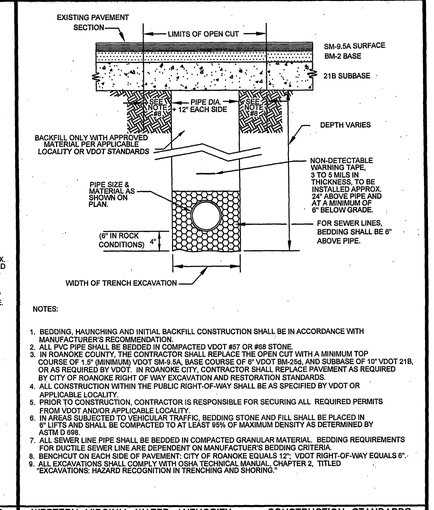


NOTES:

1. BEDDING, HAUNCHING AND INITIAL BACKFILL CONSTRUCTION SHALL BE IN ACCORDANCE WITH MANUFACTURER'S RECOMMENDATION.
2. ALL PVC PIPE SHALL BE BEDDED IN COMPACTED VDOT #57 OR #68 STONE.
3. IN ROANOKE COUNTY, THE CONTRACTOR SHALL REPLACE THE OPEN CUT WITH A MINIMUM TOP COURSE OF 1.5" (MINIMUM) VDOT SM-9.5A, BASE COURSE OF 6" VDOT BM-25A, AND SUBBASE OF 10" VDOT 21B, OR AS REQUIRED BY VDOT. IN ROANOKE CITY, CONTRACTOR SHALL REPLACE PAVEMENT AS REQUIRED BY CITY OF ROANOKE RIGHT OF WAY EXCAVATION AND RESTORATION STANDARDS.
4. ALL CONSTRUCTION WITHIN THE PUBLIC RIGHT-OF-WAY SHALL BE AS SPECIFIED BY VDOT OR APPLICABLE LOCALITY.
5. PRIOR TO CONSTRUCTION, CONTRACTOR IS RESPONSIBLE FOR SECURING ALL REQUIRED PERMITS FROM VDOT AND/OR APPLICABLE LOCALITY.
6. IN AREAS SUBJECTED TO VEHICULAR TRAFFIC, BEDDING STONE AND FILL SHALL BE PLACED IN 6" LIFTS AND SHALL BE COMPACTED TO AT LEAST 95% OF MAXIMUM DENSITY AS DETERMINED BY ASTM D 698.
7. ALL SEWER LINE PIPE SHALL BE BEDDED IN COMPACTED GRANULAR MATERIAL. BEDDING REQUIREMENTS FOR DUCTILE SEWER LINE ARE DEPENDENT ON MANUFACTURER'S BEDDING CRITERIA.
8. BENCHCUT ON EACH SIDE OF PAVEMENT: CITY OF ROANOKE EQUALS 12"; VDOT RIGHT-OF-WAY EQUALS 6".
9. ALL EXCAVATIONS SHALL COMPLY WITH OSHA TECHNICAL MANUAL, CHAPTER 2, TITLED "EXCAVATIONS: HAZARD RECOGNITION IN TRENCHING AND SHORING."

WESTERN VIRGINIA WATER AUTHORITY – CONSTRUCTION STANDARDS

| REVISION | DATE |
|---|---|
| | 07/01/04 |
| | 03/01/06 |

*BEDDING AND BACKFILL UNDER PAVEMENT AND RIGHT-OF-WAY* — S-31


LUMSDEN ASSOCIATES, P.C.
ENGINEERS-SURVEYORS-PLANNERS
ROANOKE, VIRGINIA

4664 BRAMBLETON AVENUE
P.O. BOX 20668
ROANOKE, VIRGINIA 24018

PHONE: (540) 774-4411
FAX: (540) 774-7127
E-MAIL: MAIL@LUMSDENPC.COM


COMMONWEALTH OF VIRGINIA
THOMAS C. DALE
Lic. No. 033002
5/5/08
PROFESSIONAL ENGINEER

# WATER AND SANITARY SEWER DETAILS

APPROVED

APPLEWOOD, SECTION No. 19
"THE ORCHARDS"
PREPARED FOR
F. & W. COMMUNITY DEVELOPMENT CORPORATION
HOLLINS MAGISTERIAL DISTRICT
ROANOKE COUNTY, VIRGINIA

REVISIONS

| NO. | DATE | DESCRIPTION |
|---|---|---|
| 1 | | |
| 2 | | |
| 3 | | |
| 4 | | |
| 5 | | |

DATE: MAY 5, 2008
SCALE: NONE
COMMISSION NO: 07-230

SHEET 13 OF 13

07230comp01-13-nd03.plt

w:\drawings\2007\07230\eng\07230comp01.dwg